CATALOG AND MANUAL

D-75

LOGAN-LILLY HOIST CONTROLLER

MODEL D

HEREIN REFERRED TO AND POPULARLY KNOWN AS

LILLY CONTROLLER

AND

AUXILIARY EQUIPMENT

FOR MINE HOISTS

ENGINEERED AND MANUFACTURED

BY

Logan ACTUATOR CO.
MANUFACTURER

CHICAGO, ILLINOIS
U. S. A.

FOREWORD

The purpose of this publication is to explain and emphasize the importance of automatic safety equipment for mine hoists,—to describe the Model D Lilly Controller and auxiliary equipment,—and to give instructions for installing and adjusting.

Our standard equipment* is illustrated and described, and at each illustration there is a reference to the paragraphs describing that equipment, all paragraphs being numbered.

There are three sections. The first describes Model D Lilly Hoist Controllers and auxiliary equipment.

The second contains illustrations of typical installations on mine hoists.

The third section contains instructions for the installation, adjustment, and maintenance of Model D Lilly Controllers and auxiliary equipment.

Typical electrical diagrams are shown, including schematic diagrams, which should simplify working out the circuits and connections for any installation.

We are always glad to assist those desiring further detailed information concerning the selection, installation, adjustment or maintenance of the equipment that we manufacture.

We also manufacture the Model C Lilly Controller, particularly adapted for large and fast hoists, or wherever maximum protection is required; and the Simplex Controller, a simplified controller for small hoists.

To Insure Safety
In Hoist Operation

(A) The brakes must be capable of meeting the maximum demands and be responsive to the control of the hoistman.

(B) Suitable automatic safety equipment must be selected and carefully installed.

(C) Correct adjustment of the brakes, the control mechanism, and the automatic safety equipment must be maintained.

(D) Careful inspection of these features must be made regularly by a responsible person who thoroughly understands the equipment, and a written report should be made and retained as a matter of record.

Copyright, 1975
By HENRY H. LOGAN
Chicago, Illinois

Printed by Carl Gorr Printing Company, Chicago, U.S.A.

CATALOG AND MANUAL

D-75

LILLY HOIST CONTROLLER

MODEL D

AND AUXILIARY EQUIPMENT

for

MINE HOISTS

Electric, Steam and Air Operated

LOGAN ACTUATOR CO.

CHICAGO, ILLINOIS, U.S.A.

We also manufacture the Model C Logan-Lilly Controller, particularly adapted for large and fast hoists, or wherever maximum protection is required; and the Simplex Controller, a simplified controller for small hoists.

CONTENTS

General

PAGE

The Importance of Automatic Safety on Mine Hoists 1

Summary of Protection Afforded by a Lilly Hoist Controller 2

Man Safety Equipment 2-11-31

The Lilly Hoist Controller—Principle of Operation 3-31

No Interference with Normal Operation of the Hoist 3

Switch Contacts 3

Gear Combinations 3-19-20

Brake Regulating 3-35-43

Brake Control for Unbalanced Slope Hoists 4

Overspeed Warning 4

Source of Electric Current for the Overspeed Alarm Bell 4

The Electro-Magnetic Holding System 4

Auxiliary Units 4

Number of Controllers Required 4

Installations on Electric Hoists 5

Installations on Electric Hoists with Ward-Leonard Control 5

Track Limit Switches 5

Brake Engines 5

Hoists Having a Main Motor and an Auxiliary Motor 6

PAGE

The Model D Lilly Hoist Controller 8-9

Retarding Cams and Limit Cams 10

Limit Switches 11

Electrical Connections 11

Weight Equipment for Small Electric Hoists with Hand Operated Brakes 12-13

Solenoid Valve Equipment for Electric Hoists with Oil Operated Gravity Brakes 14-15

Angle Bearings and Gears 14

Weight Equipment for Electric Hoists with Air Operated Gravity Brakes 16-17-18-19

The Weight, Shaft, and Magnetic Latch of the Weight Units 17-18

Gear Combinations and Method of Selecting 19-20

Table of Gear Combinations for Model D Controller 20

Trips of Unusually Long Duration 20

Diagram of Cage Travel 21

Rod Fittings 22-23

Instructions for Ordering Model D Controllers and Equipment 23

Tables, Conversion Tables and Data 24-25

Typical Installations 26-27

Instructions for Installing and Adjusting

Drawing showing Typical Drives 28

Drawing of Man-safety Lever Connections 28

The Location of a Lilly Controller on a Hoist 29

The Drive for the Lilly Controller 29

The Model D Lilly Controller. Explanation of Diagram D-619, Fig. 33 31

Drawing of Model D Lilly Controller Adjustments 31

Cam Profiles 32

Adjusting a Model D Lilly Controller 33

Adjusting the Man-safety Equipment on a Model D Lilly Controller..34

Brakes—Adjusting the Automatic Brake Operating Mechanism 35

The Auxiliary Weight Units with Regulating Stop to Operate Gravity Brake Engines 35

Auxiliary Weight Units using an Oil Regulating Cylinder 36

Adjusting the Regulating Cylinder 36

Adjusting the Piston Valve—for Oil Operated Gravity Brakes 37

Safety Equipment for Hand-Operated Brakes 37

Safety Equipment for Air or Steam Operated Gravity Brake Engines with Oil Cylinder Control, and Synchronizing Valves for the Air (or steam) Cylinder and the Oil Cylinder 37

Diagram of Oil Operated Brake System 38

Diagram of Air Operated Brake Engine Connections 39

The Brake and Throttle Operator Adjustments 40

Stop Button 40

Putting the Lilly Controller in Service and Testing 40

Comments on Wiring Diagrams 41

Comments on Wiring 41

Electrical Troubles and Remedies 41

Maintenance Recommendations 42

The Hoist Brakes 42

Sketches of various forms of Brake Regulating Means used with Lilly Controllers 43

Electrical Wiring Diagrams for Electric Hoists 44-45-46-47

THE IMPORTANCE OF AUTOMATIC SAFETY EQUIPMENT ON MINE HOISTS

1. Mine hoists are liable to have accidents of various kinds, some of which are beyond the control of the hoistman. These accidents, which are not uncommon among hoists without adequate safety protection, have frequently been accompanied by injuries or fatalities. All hoists should therefore be protected by dependable automatic safety equipment.

2. Hoist accidents may be caused by —

   a — Starting the hoist in the wrong direction when at or near the limit of travel.

   b — Running the hoist too fast without warning for the proper speed limit.

   c — Failure to commence retarding at a sufficient distance from the end of travel to permit the cage or skip to be stopped within the normal limits.

   d — Failure to continue retardation at the proper rate.

   e — Failure to stop the hoist when the normal limit of travel has been reached.

   f — Mistaking the marks on the indicator or drum.

   g — Lowering with the brake, and allowing the drum to run away.*

   h — Releasing the brake from a free drum while the clutch is disengaged, or disengaging the clutch while the brake is released.**

   i — Forgetting that both cages or skips of a double-drum hoist with one or both drums clutch driven, may be at the top or bottom at the same time, clutching in and starting in either direction.

   j — Cutting off power at an intermediate position and omitting to set the brake.

   k — Electric power failure, or steam being shut off from the line while the hoist is in motion, without the brake being set to hold the load.

   l — Clutch breaking, allowing a drum to run away.

   m — Breaking the drive pinion or gear, or a key coming out.

   n — Breaking or shearing bolts in the drive gear.

   o — Breaking the drive coupling between the motor and the hoist.

   p — Breaking the connection between the hoistman's lever and the brake mechanism or the brake engine.

   q — Hand lever pawl slipping out of its notch, and releasing the brake.

   r — Indicator drive failing, due to the loss of a key — friction drive being improperly tightened — chain worn out of pitch and climbing on sprockets — chain coming off — or gears working out of mesh.

   s — Hoist being operated by an inexperienced or unauthorized person.

   t — Running too fast with men, and having no overspeed warning to inform the hoistman of overspeeding.

   u — Hoisting men above the man-landing, and possibly dumping them in a bin or chute.

   v — Lowering men into the sump.

   w — Absent mindedness on the part of the hoistman for a moment — falling asleep — fainting — being struck by lightning — being incapacitated or killed by a rope breaking, a pipe bursting, or a gasket blowing out, or dropping dead from natural causes.

3. Accidents resulting from some of these potential causes are comparatively rare, while others have been common, and all possible contingencies should be considered when selecting, installing and adjusting the safety equipment.

*Hoist drums and rotors have burst from centrifugal force.

**The brake and clutch should be interlocked, but some are not.

SUMMARY OF PROTECTION AFFORDED BY A LILLY HOIST CONTROLLER

4. *It is assumed that the control apparatus, the brake mechanism, and the Lilly Controller are properly installed, adjusted, and maintained.*

It will:

5. —prevent overspeeding in hoisting and lowering.

6. —sound an alarm when the normal speed is exceeded, and will stop the hoist if the hoistman fails to respond to the alarm.

7. —warn the hoistman when to commence retarding the hoist for the top or bottom of the shaft, and will stop the hoist if the warning is not heeded.

8. —warn the hoistman if the retardation of the hoist is not being properly conducted within the predetermined limits of safety, and will stop the hoist if he fails to respond.

9. —prevent the cages or skips from being hoisted or lowered beyond the limits for which the Lilly Controller is adjusted.

10. —cut off the power and apply the brake if the hoist is started in the wrong direction from the top or bottom, and when used with a back-out switch on an electric hoist, prevents the power from being applied in the wrong direction after a limit switch is opened.

11. —immediately apply the brake (of an electric hoist) in case of power failure.

12. —regulate the speed of applying the brake in case of an emergency stop due to overspeed, failure to stop at the limits, current failure, or the hoistman pushing the stop-button, thus eliminating the dangers due to sudden and violent emergency application at full speed, and also causing the quickest possible brake application at the ends of cage travel where the hoist speed must be low.

13. If a free drum is accidentally unclutched with the brake released, or if the brake is accidentally released with the drum unclutched, or if the clutch should break, allowing the drum to run away, as soon as the speed increases above normal the alarm bell will ring, and the Lilly Controller will apply the brake to stop the drum if the speed increases further.

14. A stop-button or safety switch should be placed within reach of the hoistman to enable him to stop the hoist thru the Lilly Controller equipment in case that any of his controls fail to respond, or in case of conditions that might endanger his life were he to remain at his post to bring the hoist to rest in the usual way.

MAN-SAFETY EQUIPMENT

15. Hoists handling men to and from the surface, and hoisting the mine production to a higher point, such as the head-frame or tipple, should have the automatic safety equipment arranged to function at will for men or material, especially when it would be possible without special protection to dump the men in a bin or chute.

16. Man-safety equipment is available as an extra feature to guard against overrunning the man-landings at the top and bottom, and to prevent hoisting or lowering men at higher speeds than those consistent with safety.

17. The Man-safety is usually engaged and disengaged by a hand lever placed within reach of the hoistman, and switches within the man-safety unit provide means of indicating the position of the lever by a series of lights, one in the engine room and one or more at the shaft.

18. Extra cams for the Man-safety mount on the back of the cam dial, and these cams may be set to stop the cage at any place within the maximum normal range of travel.

19. The Man-safety will prevent the man-speed from being exceeded,—will compel a gradual approach to the top and bottom man-landings,—and will prevent hoisting or lowering men beyond those landings.

THE LILLY HOIST CONTROLLER — PRINCIPLE OF OPERATION

(See Fig. 33)

20. The fundamental principle of operation of the Lilly Controllers is based upon the co-ordinated movements of a governor and cams, the governor following the hoist speed, and the cams following the relative position of the mine cage, providing a pattern for the correct speeds at all points of travel including retardation.

21. When the hoist speed slightly exceeds the predetermined safe maximum, or if it is not decreased in conformity with the profile of the retarding cam when approaching the end of travel, an electrical contact closes a circuit to ring a bell or buzzer to warn the hoistman. If he fails to respond promptly, and permits a slight further increase in speed, or if a retarding cam engages the cam roller without the hoist being retarded, the overspeed switch in the Lilly Controller will open the safety circuit, thereby cutting off the power and setting the brake.

22. There are also two cam-operated selective limit switches independent of governor action, one for each end of travel. Each limit switch will be opened by the corresponding cam if the hoist is not stopped within the normal limit of travel, or if it is started in the wrong direction from the end of travel.

NO INTERFERENCE WITH NORMAL OPERATING OF THE HOIST

23. Lilly Controllers do not interfere with the normal operating of a hoist within the predetermined bounds of speed and travel, and the hoist may be stopped at any place and started with full torque in either direction except at the limits of travel, where it may be operated only in the return direction.

SWITCH CONTACTS

24. The Overspeed Switch and the two Limit Switches are ruggedly constructed and are regularly furnished with Silver Contacts

25. The switches and contacts are insulated for the usual voltages of 110 to 550 volts for A.C. and 110 to 250 volts D.C.

GEAR COMBINATIONS

(See page 19 and 20)

26. Twelve standard gear combinations adapt the Model D Lilly Controllers to conditions where speeds and depths vary, and each controller is furnished with the proper gears to suit the hoisting speed and travel. The gear combination can be changed in the field if necessary, to suit changes in the hoisting conditions.

BRAKE REGULATING

27. The Lilly Controller regulates the speed of setting the brakes when they are automatically applied in an emergency. This is necessary to prevent them from applying too severely while the rope speed is high, and to apply them as quickly as possible at the ends of cage travel. The speed of application within the retarding zone is graduated by cam action.

28. It should be understood that in either slow or fast emergency application of the hoist brake by the Lilly Controller it is applied fully, and not partially, because regulating the brake simply varies the time consumed in tightening it, and not the amount of tightening.

BRAKE CONTROL FOR UNBALANCED SLOPE HOISTS

29. For flat or irregular slopes where an upcoming load will run a long distance by its momentum after the power is shut off, the brake should not be applied in the same manner as for a vertical shaft, except when the drum is revolving in the lowering direction.

30. A "Brake Control" can be furnished that prevents the brake from applying automatically except while the drum is revolving in the lowering direction, or very near the top for an upcoming load.

31. This prevents danger due to suddenly stopping the drum and allowing an upcoming load to overrun the rope, and then to run back and possibly break it.

    The brake control is covered by a separate bulletin.

OVERSPEED AND UPPER AND LOWER TRAVEL LIMITS WARNING

32. A warning bell, buzzer, or light warns the hoistman in case of overspeeding or failure to retard properly, to give him a chance to act before the Lilly Controller takes control of the hoist.
    (The contacts to operate the warning are included in the Lilly Controller, but the bell, buzzer, or light should be provided by the customer, unless ordered extra.)

33. For the Retardation Warning at the top and bottom limits of travel, a choice is given to have a single stroke gong on the Lilly Controller, or electrical contacts to operate an independent bell or buzzer wherever desired in the engine room.

SOURCE OF ELECTRIC CURRENT FOR THE OVERSPEED ALARM BELL

34. Low voltage current (6 to 12 volts) for the overspeed alarm bell is usually supplied by a bell-ringing transformer for A.C. electric hoists, or for D.C. and steam hoists when an A.C. light or power circuit is available. Otherwise the bell may be operated from a D.C. circuit thru a rheostat to give 8 to 12 volts, and for steam hoists a battery may be used.

THE ELECTRO-MAGNETIC HOLDING SYSTEM

35. An outstanding advantage of the Lilly Controller is its instantaneous performance accomplished through the electrical holding system. This electrical holding system may include a solenoid, magnetic contactor or magnetic latch. When the safety circuit is interrupted by the Lilly Controller, an emergency push-button, track limit switches, or current failure, the holding system immediately releases the means to stop the hoist.

36. The electrical system also facilitates the use of track limit switches at the shaft, which produce immediate action in the engine room even if quite distant. This action is not affected by weather conditions or lost motion, such as would render mechanical means inoperative or inefficient.

AUXILIARY UNITS

37. This catalog illustrates and describes Lilly Controller auxiliary units for hoists of the usual types. These units are used by most hoist builders for new hoists, and they are particularly adaptable for equipping hoists in the field. Many large hoists have corresponding auxiliary equipment built in and arranged to be actuated and regulated by the Lilly Controller.

NUMBER OF CONTROLLERS REQUIRED

38. A single-drum hoist, or a hoist having two or more drums keyed to the drum shaft, or geared to each other and never operated independently, requires only one hoist controller, regardless of the number of ropes involved.

39. A double-drum hoist having one or both drums clutch driven, and arranged so that either or both may be operated independently, requires two hoist controllers, one geared to each drum.

INSTALLATIONS ON ELECTRIC HOISTS

40. The simplest Lilly Controller installations are those on Electric Hoists, where the Lilly Controller operates on a relay circuit, usually the retaining circuit of the "Undervoltage Protective Contactor." This contactor opens the retaining circuit for the primary contactors, thereby cutting the power off the hoist motor, and de-energizing the coil of a solenoid or electromagnetic latch, to set the brake.

INSTALLATIONS ON ELECTRIC HOISTS WITH WARD-LEONARD CONTROL

41. When Lilly Controllers are installed on Ward-Leonard controlled hoists, the mechanical brakes are operated in the usual manner. When the hoist is equipped with decelerating contactors, dynamic braking may be utilized together with mechanical braking for emergency purposes by having the Lilly Controller open the control circuit, and the decelerating contactors will control the dynamic braking. When the installation is on a Ward-Leonard Hoist that is not equipped with decelerating contactors, dynamic braking can be utilized for emergency purposes by installing special electrical apparatus operating in conjunction with the Lilly Controller.

42. Dynamic braking should be utilized when possible to provide double means of stopping the hoist in an emergency.

TRACK LIMIT SWITCHES

43. Where the clearance at the limits of travel is very little, especially if a great length of rope must be wound, or where there are several layers, it is desirable to use track limit switches in the head-frame, shaft house, or tipple, to insure an accurate stop at the limit. They do not need to be readjusted after being set at the proper place, and they compensate for rope stretch and uncertain position of the cage in relation to the position of the drum (due to varying loads). "Electric Eyes" have been used successfully at some mines for track limit switches and under suitable conditions they have a number of advantages.

44. Track limit switches, without a hoist controller, may not stop a hoist within the available clearance if the speed is not reduced, and they cannot prevent overspeed or runaways, but by using track limit switches in conjunction with a Lilly Controller, maximum protection is assured.

45. The Lilly Controller without a track limit switch will stop a hoist drum at the limit for which it is adjusted, but no device geared to the drum can compensate for variations in the position of a cage due to varying loads, especially with a long rope where the variation in cage position sometimes amounts to several feet with relation to the position of the drum.

BRAKE ENGINES

46. When Lilly Controllers are to be installed on hoists having hand or foot operated brakes requiring a large amount of energy to apply, we recommend that "gravity brake engines"* be installed, making it easier for the hoistman to operate the brakes, and eliminating delay in restarting after an emergency stop.

47. Where heavy emergency weights must be reset manually, time is lost in resetting, and the heavy lift may overtax the strength of the hoistman. Weights of 100 to 150 lbs. may usually be reset by hand without great difficulty, and a 200 lb. weight is about the limit for a man to reset. Lifting that amount directly is usually not desirable from the standpoint of the hoistman's welfare.

HOISTS HAVING A MAIN MOTOR AND AN AUXILIARY MOTOR

48. Hoists having a main motor, and a smaller auxiliary motor to operate at lower drum speed, can be equipped with a Lilly Controller arranged so that when the large motor is engaged, the hoist may be operated at full speed, but when the small motor is clutched in, the drum speed is automatically held to that suitable for the small motor.

CATALOG

D-75

THE MODEL D LILLY HOIST CONTROLLER

(See Figs. 1, 2, 3, 4)

49. The Model D Lilly Controller is very compact and accessible, and it may be assembled either right or left hand in order to face the cam dial to the right or left with relation to the drive. It has a rigid, cast iron frame carrying a flyball governor and a cam dial twelve inches in diameter, with the retarding cams for both directions of travel mounted on the front face at the outer edge,—limit cams on a projecting ring at the front,—Man-safety cams on spacers at the back, — and cams to operate the warning gong, on a projecting ring at the back.

50. When it is desired to combine a depth indicator with the Lilly Controller, a bracket and indicator dial can be fastened to the back of the frame, extending clear of the controller mechanism and concentric with the dial shaft. An extended shaft projects beyond the bracket to carry a pointer which may be adjusted and clamped to the shaft. This type of depth indicator is simple and economical where it can be used, but the location most suitable for a Lilly Controller is not always suitable for an indicator, and from a safety standpoint it is often preferred to have the indicator and the controller driven independently.

51. The speed range of this controller is approximately 5, so that it will control the hoist speed down to one-fifth of full speed when correctly adjusted.

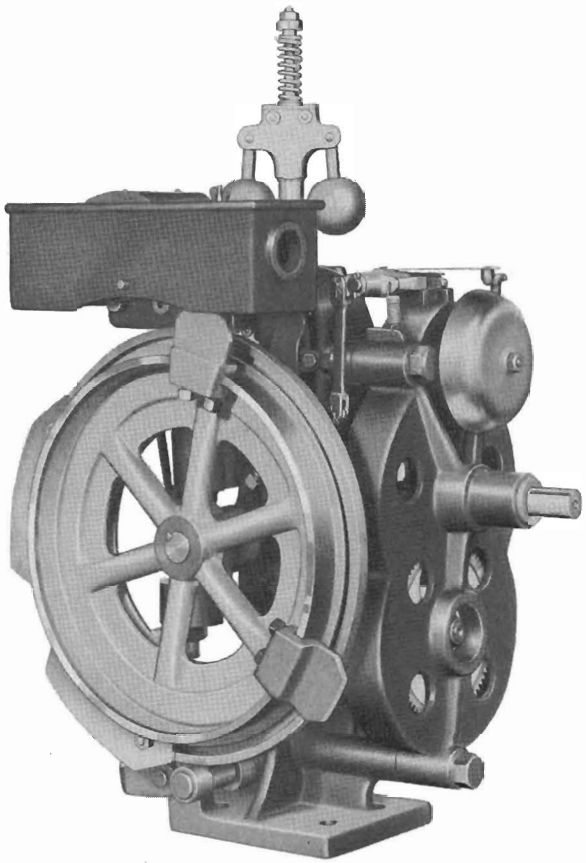

FIG. 1—(Above) Lilly Hoist Controller, Model D, assembled left hand. It is recommended for hoists of moderate sizes and speeds. Its effective speed range is 5 when correctly adjusted, and therefore the governor will protect the hoist for all speeds down to within one-fifth of full speed.

The drive shaft is at the right side, the warning gong above it, the cam dial with cams in the left foreground, and the limit switch housing is above the dial.

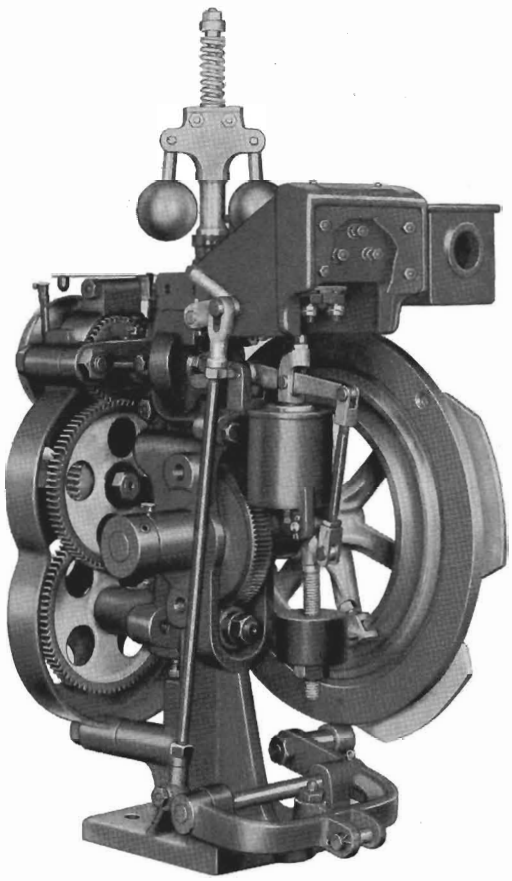

FIG. 2—(Right) Rear view of Model D Lilly Controller showing the changeable gears, the worm-gearing, the dashpot with adjustable counterweight, the governor and linkage, the overspeed switch and the terminal panel.

The two lower terminals are for the safety circuit, and the upper one for the warning bell circuit.

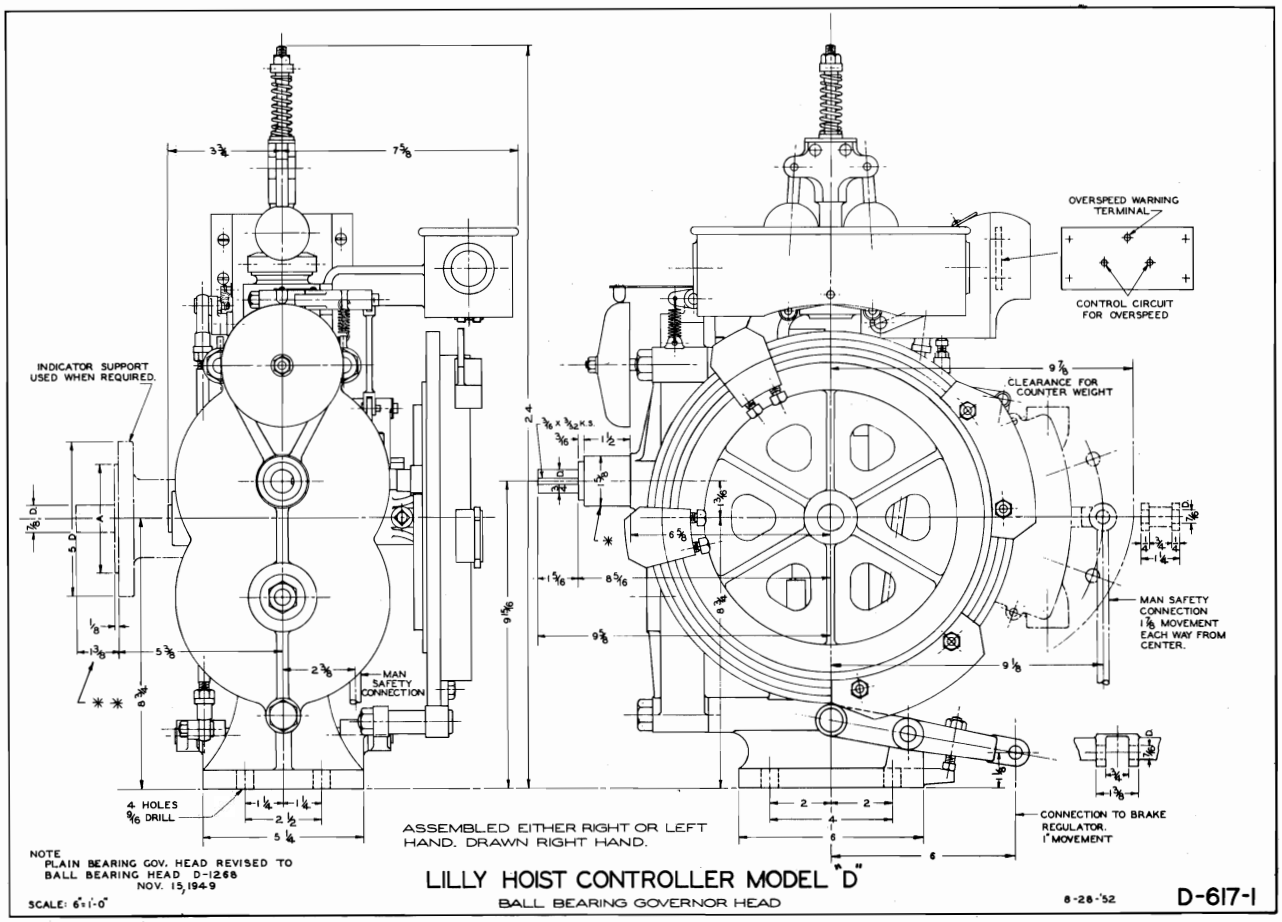

FIG. 3—Model D Lilly Controller. May be assembled right hand as drawn, or left hand. The Man-safety Equipment is indicated on this drawing and it is shown clearly in Fig. 13. See also C—Fig. 33. The scale of drawing D-617 is approximately 1" = 6".

*The Diameter of the concentric BOSS that carries the drive shaft was originally 1.5 inches. For the later CONTROLLERS it is 1.625 inches. This should be checked if an angle drive is to be used.

** 1⅜ inches is standard.

2⅜ inches is shown in earlier catalogs, is special.

FIG. 4—(Right) Model D Lilly Controller with electrical contacts for a remote slowdown alarm, and a counterweight in the retarding yoke, as used for blast furnace skip hoists.

The scale of drawing 617-X is approx. 1" = 8".

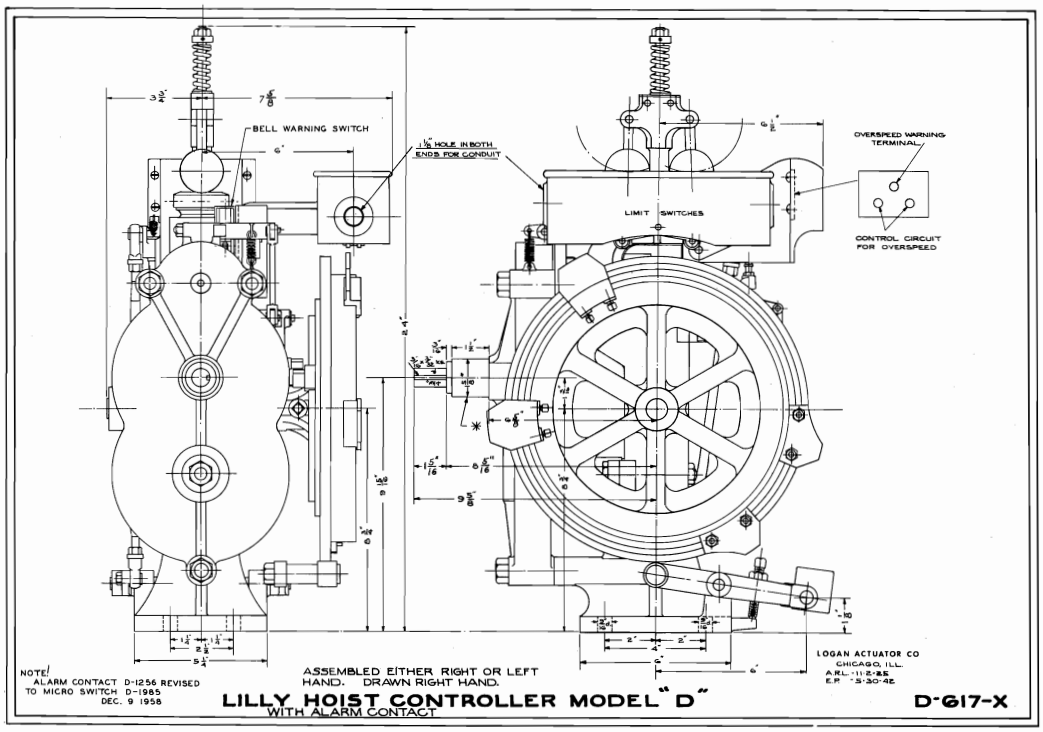

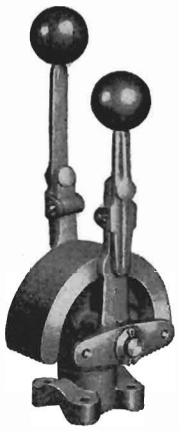

Fig. 5.

FIGS. 5 and 6—Man-safety levers. These can be furnished in pairs or with a single lever on a base. The quadrant can be swiveled to any angle on the base and tightened there. If necessary it can also be doweled in place.

The scale of the drawing is approx. 1" = 4".

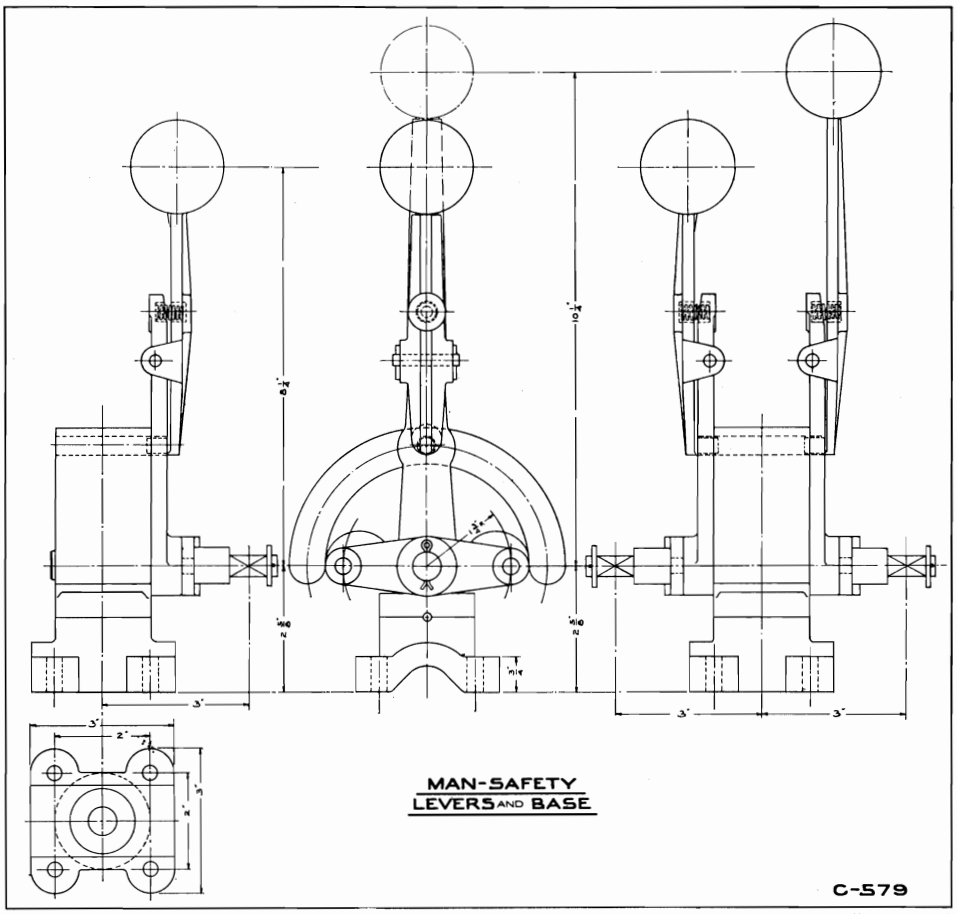

Fig. 6.

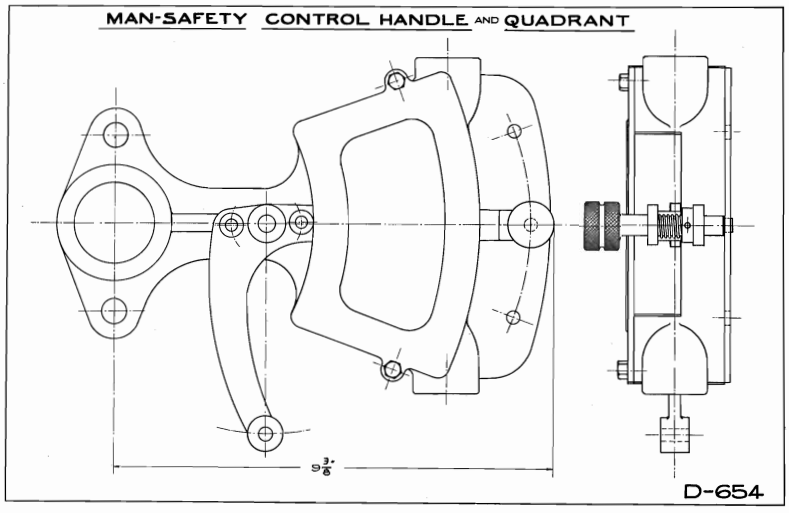

FIG. 7—Self contained control handle and quadrant for use where the controller is within reach of the hoistman.

Where suitable, this equipment eliminates the need of the levers in Figs. 5 and 6, and necessary connections. Scale of drawing — 1" = 4".

RETARDING CAMS AND LIMIT CAMS

52. The retarding cams fasten to the face of the cam dial by means of bolts in a "T" slot, and the limit cams fasten to the front projecting ring by set screws. These cams may be set at any place in the circle without interfering with each other.

53. It will be noted that the length of the tapering portion of the retarding cams should correspond with the movement of the cam dial during retardation, and the height of the cam at any point should be in inverse proportion to the maximum allowable hoist speed for the corresponding position of the cage. The cams are furnished with the working face unfinished, to be profiled after installation.

54. If retardation does not commence when the retarding cam reaches the roller, the cam will move the switch downward toward the governor operated contact, thereby opening the switch just as it would be opened by the governor contact moving upward when the maximum normal speed is exceeded. The same action will occur at any point on the profile of the cam if the speed at that point exceeds that for which the cam was profiled. A connection from the cam operated member also controls the speed at which the brakes apply, the importance of which is explained below.

55. When the Lilly Controller cuts off the power and applies the brakes at the beginning of the retarding zone, the entire retarding distance is available for stopping the hoist from full speed, and if the brakes

are adequate, the hoist should be stopped safely within the normal limit. As the speed of the hoist is reduced, it may proceed toward the limit of travel as long as the rate of retardation is adequate, but otherwise the Lilly Controller will intervene to stop the hoist.

56. The lower the hoist speed, the closer the hoist may approach the end of travel without interference from the Lilly Controller, and consequently less distance will be available for stopping it. Hence the need of controlling the brakes to quicken their rate of action as the cage approaches the end of travel. It is obvious that the slower the hoist speed the faster the brakes may be applied safely, and therefore a rate of setting the brakes that would be unsafe at high speeds is desirable near the end of travel where the hoist speed will necessarily be relatively low.

LIMIT SWITCHES

57. The limit switches are in a housing at the front of the controller frame above the cam dial and each in turn is arranged to be opened by the corresponding limit cam. These cams and rollers are offset with relation to each other, rendering them selective, so that each limit cam will open only the corresponding limit switch, and it will not affect the other limit switch. The limit cams are supplied finished, and need only be adjusted to the correct location on the dial.

ELECTRICAL CONNECTIONS

58. The electrical contacts are guarded, and both limit switch and Man-safety housings have outlets provided for conduit. Connections to the overspeed switch and the overspeed warning contacts may be made open and outside of the conduit, and then carefully taped to where they enter the conduit.

MAN-SAFETY EQUIPMENT

(See also Pars. 140 to 148)

59. The main unit of the Man-safety Equipment fastens to the controller frame on the cam dial side. The equipment includes two extra retarding cams with spacers which mount on the back of the cam dial, and fasten by bolts in a circular "T" slot.

60. A rocking member carrying two rollers mounts on the main roller pin between the main roller and the retarding yoke. This member connects with a moveable arm in the man-safety equipment, which in turn must be connected with the hoistman's hand lever. When the hoistman's lever is moved to protect men, the rocking member is thereby rocked to correspond, bringing one of the rollers into position to be engaged by a man-safety cam, and a switch within the housing closes a light circuit to show by indicating lights in the engine room and at the shaft when the man-safety is engaged.

61. Another connection in the man-safety may be adjusted to move the overspeed switch downward any amount required to limit the speed for men, in case the man-speed is less than full hoist speed.

62. Hand levers and mounting unit as supplied for the man-safety are to be installed on the platform railing or on an independent pedestal. Where the Lilly Controllers are to be installed within reach of the hoistman, a handle and locking means as shown in Fig. 7 is recommended instead of separate levers with necessary connections.

63. When Man-safety Equipment is installed on a hoist with two cages in balance, handled by one drum or two fixed drums, it is customary to limit the travel of each cage in turn as they are used to transport men to and from the bottom of the shaft, permitting the other cage unrestricted travel within the extreme limits. There are three positions for the man-safety lever for an installation of this kind. (See A, Fig. 32.) (1) Central, permitting full speed and full travel. (2) At one side for one cage. (3) At the opposite side for the other cage.

64. For these conditions the cams and rollers are offset, rendering them selective to protect each cage in turn.

65. For a single drum handling one cage only, the hand lever will have two normal positions, and the cams will be in line to engage a single roller. (See B, Fig. 32.) (1) At one side for full speed and full travel. (2) At the opposite side to handle men.

66. A double-drum hoist with either or both drums clutch driven, requires a Lilly Controller for each drum, and the man-safety for each of the controllers will be the same as that shown at "B," Fig. 32.

67. Two hand levers are required, and they may both be mounted on a single base and quadrant, or each may have an independent mounting. The latter is now generally preferred, and usually simplifies the installation.

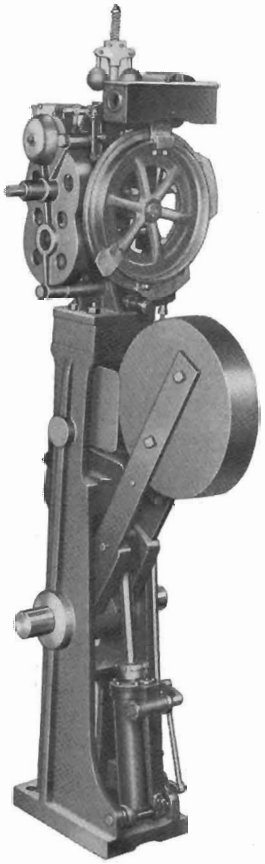

Fig. 8.

WEIGHT EQUIPMENT FOR SMALL ELECTRIC HOISTS WITH HAND OPERATED BRAKES

(See Figs. 8, 9 and 11)

68. The weight unit for emergency setting of hand brakes comprises a pedestal to carry a Model D Lilly Controller, and a weighted arm with magnetic latch to hold the weight in a reserve position. There is also an oil cylinder to control the movement of the weighted arm. This cylinder has a rotary valve arranged to be actuated by the Lilly Controller, to control the speed of the weight when released.

69. The weight tightens the brake by means of an arm keyed on the 2" shaft that projects at the sides of the pedestal, and connected to the brake by a slotted connection or its equivalent. A similar connection for the hoistman's lever permits the brakes to be applied by the hoistman or the weight, without interference.

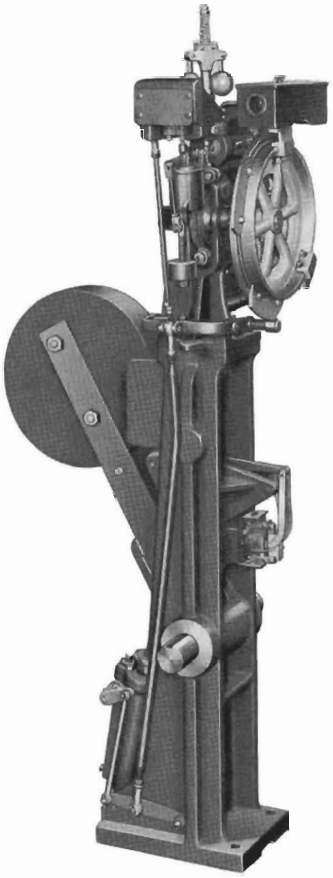

Fig. 9.

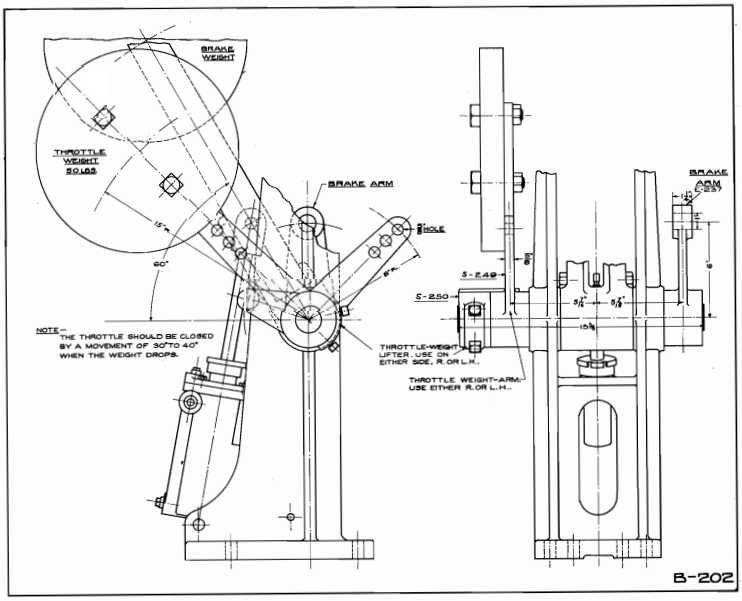

Fig. 10.

FIGS. 8 and 9—Lilly Controller and weight equipment for small electric hoist with hand brakes. A 100-lb. weight is supplied as standard, and additional weight up to 100 lbs. may be added if necessary, using longer bolts.

It will be seen that when the controller is mounted on the pedestal with the cam dial over the weight, it is necessary to use a 2" elevating block to enable the controller cams to clear the weight.

The magnetic latch shown at the right holds the weight up until the circuit is opened, and the regulating cylinder with control valve actuated by the Lilly Controller allows the weight to drop at a variable speed to suit the position of the cage in the shaft. The weight shaft, which has a keyway the full length can be extended at either side by loosening a set-screw in the hub of the weight arm, and driving the shaft in the desired direction. See Paragraphs 68 to 69 and 159 to 163.

FIG. 10—Throttle closing equipment for use with the weight unit (B-279) in Figs. 8 and 9, for steam hoist.

When the brake weight is latched in reserve the throttle weight is carried by the lifter shown in the foreground. When the brake weight drops, the throttle weight also drops to close the throttle, then stops, while the brake weight moves independently to tighten the brake.

Scale of drawing, 1" = 12".

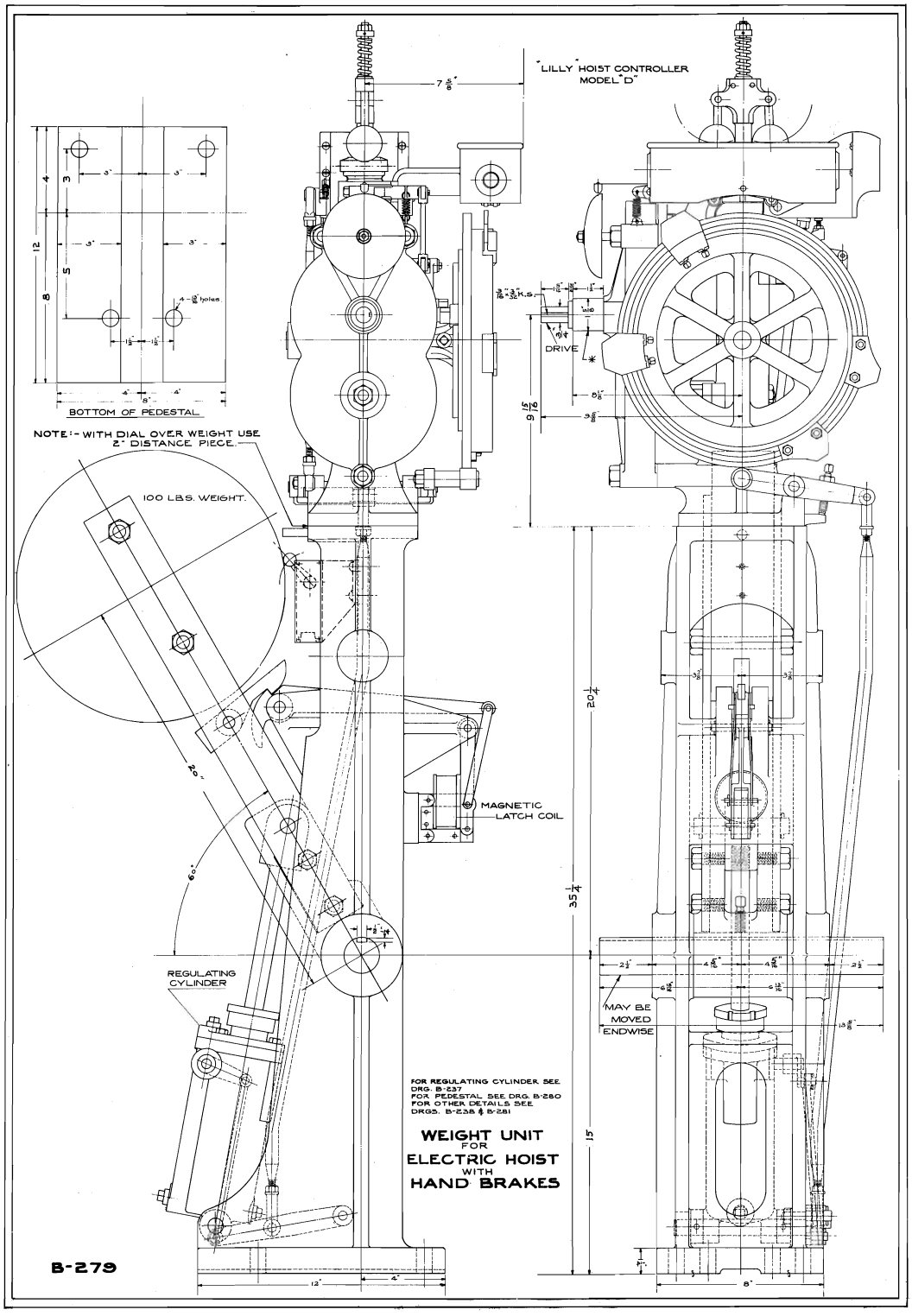

FIG. 11 — Weight equipment shown in Figs. 8 and 9. The Lilly Controller may be assembled right hand or left hand (see Fig. 3), and it can be mounted on the pedestal with the cam dial over the weight or opposite, as in Figs. 8 and 9 respectively.

Scale of drawing, 1" = 8".

*The Diameter of the concentric BOSS that carries the drive shaft was originally 1.5 inches. For the later CONTROLLERS it is 1.625 inches. This should be checked if an angle drive is to be used.

70. A switch above the weight is closed while the weight is up, and it may be connected in any suitable manner if an electrical interlock is required.

SOLENOID VALVE EQUIPMENT FOR ELECTRIC HOISTS WITH OIL OPERATED GRAVITY BRAKES

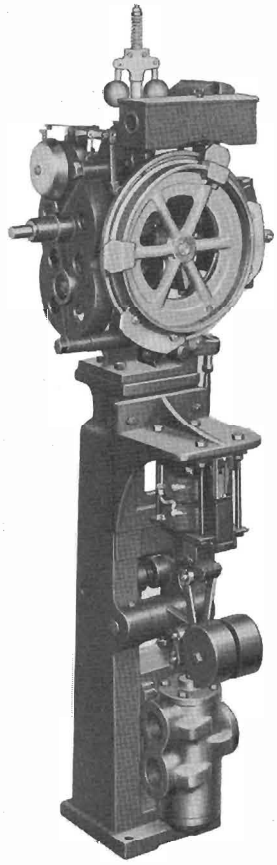

Fig. 12.

71. The solenoid valve unit comprises a pedestal for carrying a Model D Lilly Controller, and a balanced valve and solenoid to control the oil supply to the brake engine, together with mechanism to control the speed of applying the brakes when the solenoid is de-energized.

72. While the hoist operates normally, the solenoid holds the valve plunger up, permitting oil to flow from the accumulator to the brake engine valve. In case of an emergency, the solenoid core and the valve plunger drops, cutting off the oil supply, and opening a release from the brake engine cylinder to the oil sump to set the brake. The brake regulator which is actuated by the Lilly Controller regulates the distance that the valve opens, and consequently the speed at which the brake will apply. The hoistman may hasten the setting of the brake if necessary, but he cannot prevent it from setting.

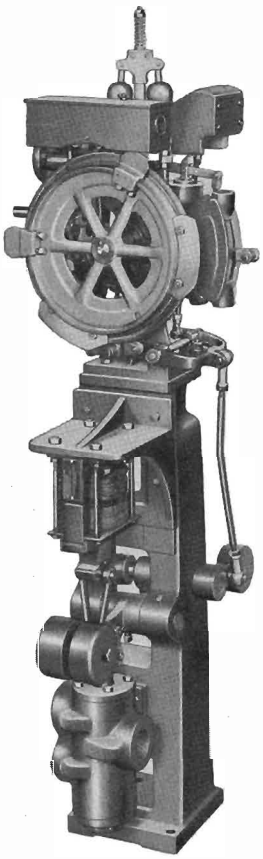

Fig. 13.

FIGS. 12 and 13—Solenoid valve unit for electric hoist with oil operated gravity brakes.

A balanced piston valve can be furnished for 1", 1½", or 2" standard pipe, and 1" and 1½" sizes can be bushed when necessary for ¾" and 1¼" pipe respectively.

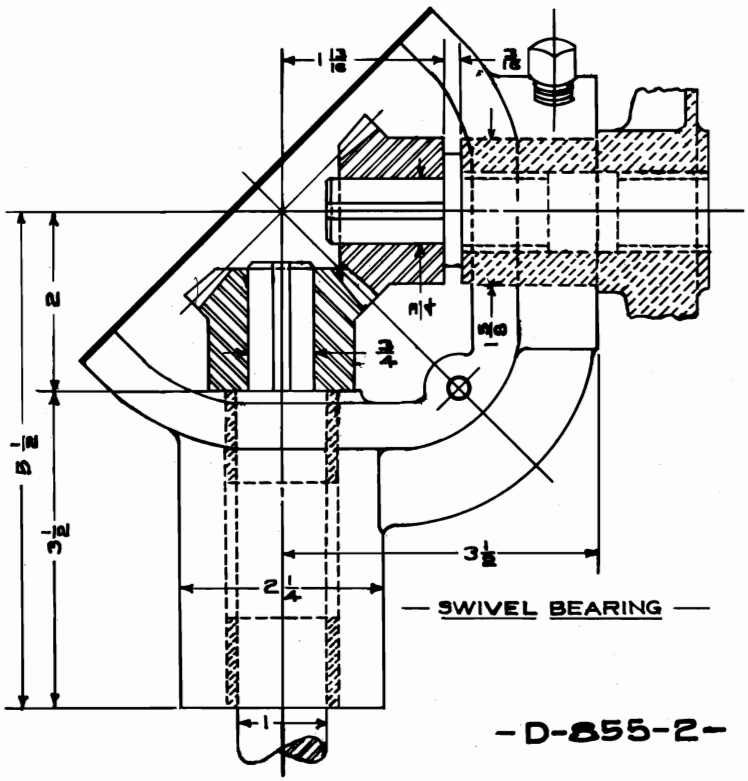

FIG. 14

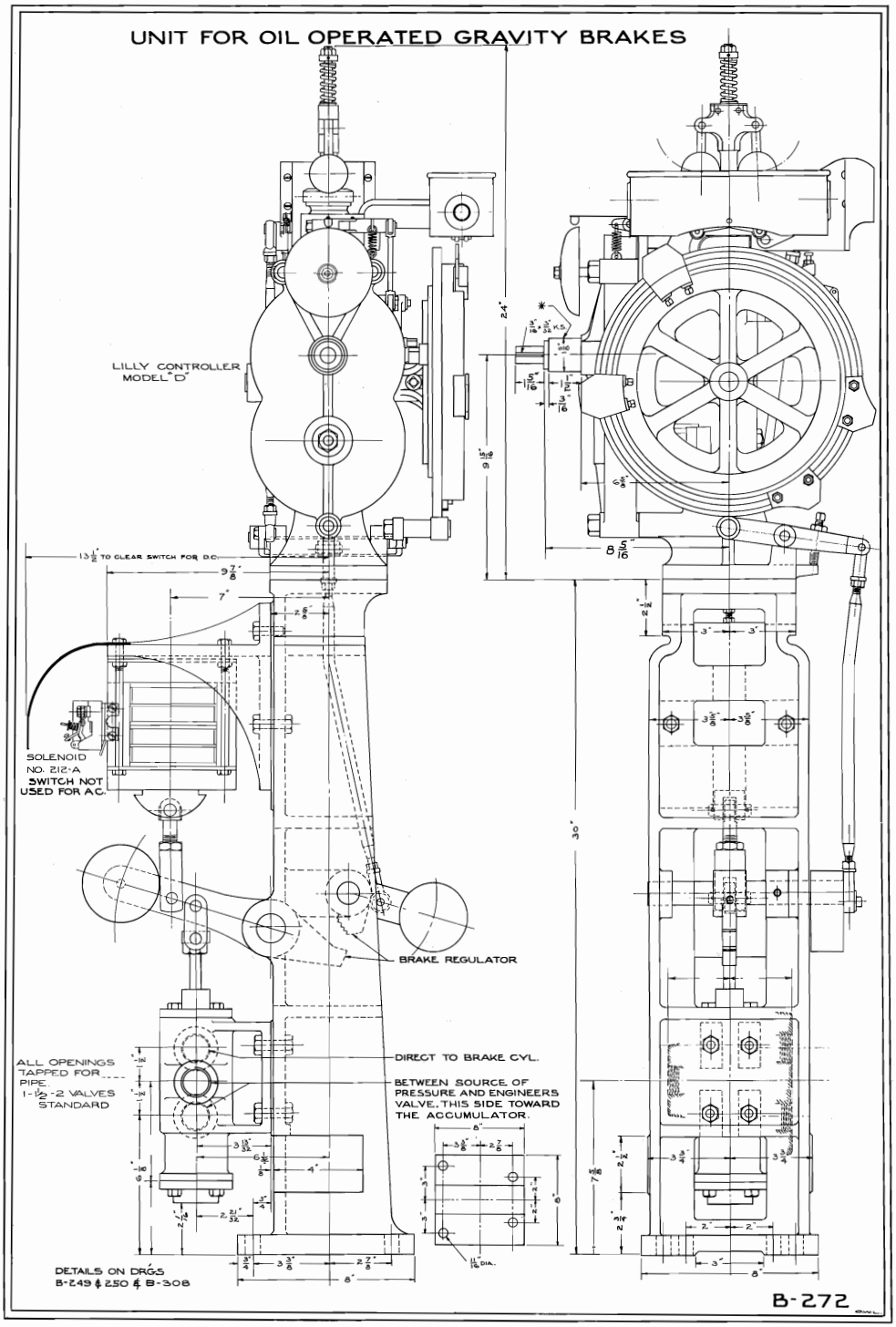

FIG. 15 — Solenoid valve unit shown in Figs. 12 and 13.

The Lilly Controller can be assembled right hand or left hand (see Fig. 3), and it can be mounted on the pedestal with the cam dial over the solenoid or opposite.

Scale of drawing, 1" = 8".

*The Diameter of the concentric BOSS that carries the drive shaft was originally 1.5 inches. For the later CONTROLLERS it is 1.625 inches. This should be checked if an angle drive is to be used.

WEIGHT EQUIPMENT FOR ELECTRIC HOISTS WITH AIR OPERATED GRAVITY BRAKES

(See Figs. 16 to 21)

73. Air operated gravity brake engines usually have an oil cataract cylinder in tandem with the air cylinder, and in order to set the brake it is necessary to permit the transfer of oil from one side of the piston to the other by means of a valve operated in synchronism with the brake engine air valve.

74. A considerable amount of energy is usually required to operate these valves, and if solenoid-operated for emergency, a relatively large solenoid is required.

75. The weight unit B-288, illustrated in Figs. 16, 17 and 18, designed to operate these valves, comprises a pedestal for carrying a Model D Lilly Controller, and a weighted arm with a magnetic latch for holding the weight in reserve. It also has a dash-pot to prevent the weight from dropping too rapidly, and a regulating stop arranged to be actuated by the Lilly Controller to regulate the distance that the weight is permitted to drop when released by the latch, thereby setting the brakes at the required speed. This unit must operate the brake engine valves directly, and not thru a floating lever. See B, Fig. 36.

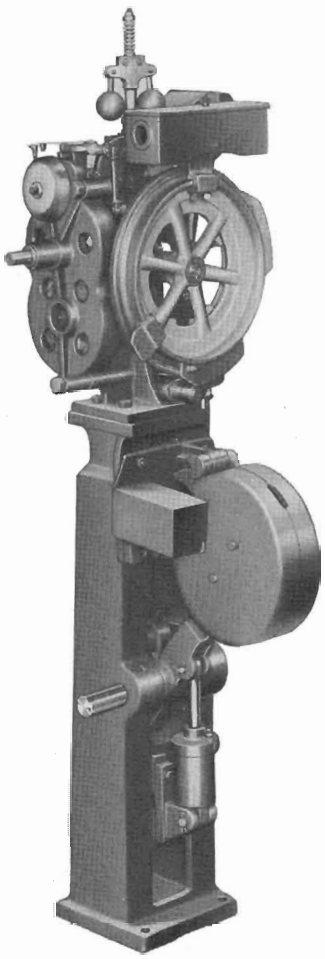

Fig. 16.

76. Another weight unit D-845, illustrated in Figs. 19, 20 and 21, similar to B-288, has an oil regulating cylinder instead of a dash-pot and regulating stop.

The regulating cylinder has an automatically controlled valve of the Corliss type in the oil by-pass to regulate the speed at which the weight will drop to actuate the brake engine at the predetermined speed desired.

77. This unit must operate the brake engine thru the floating arm just as it would be operated by the hoistman, as illustrated in C Fig. 36.

FIGS. 16 and 17—Weight equipment for electric hoist with air operated gravity brakes.

A 52 lb. weight on an arm at a 10" radius is held up by the magnetic latch shown in both views, and when the electric circuit is opened, the weight drops until stopped by the brake regulating stop in the pedestal, moving the valves of the brake engine to set the brake at a speed governed by the position of the cage in the shaft.

See B—Fig. 36, and Pars. 73 to 80, and 149 to 163.



Fig. 17.

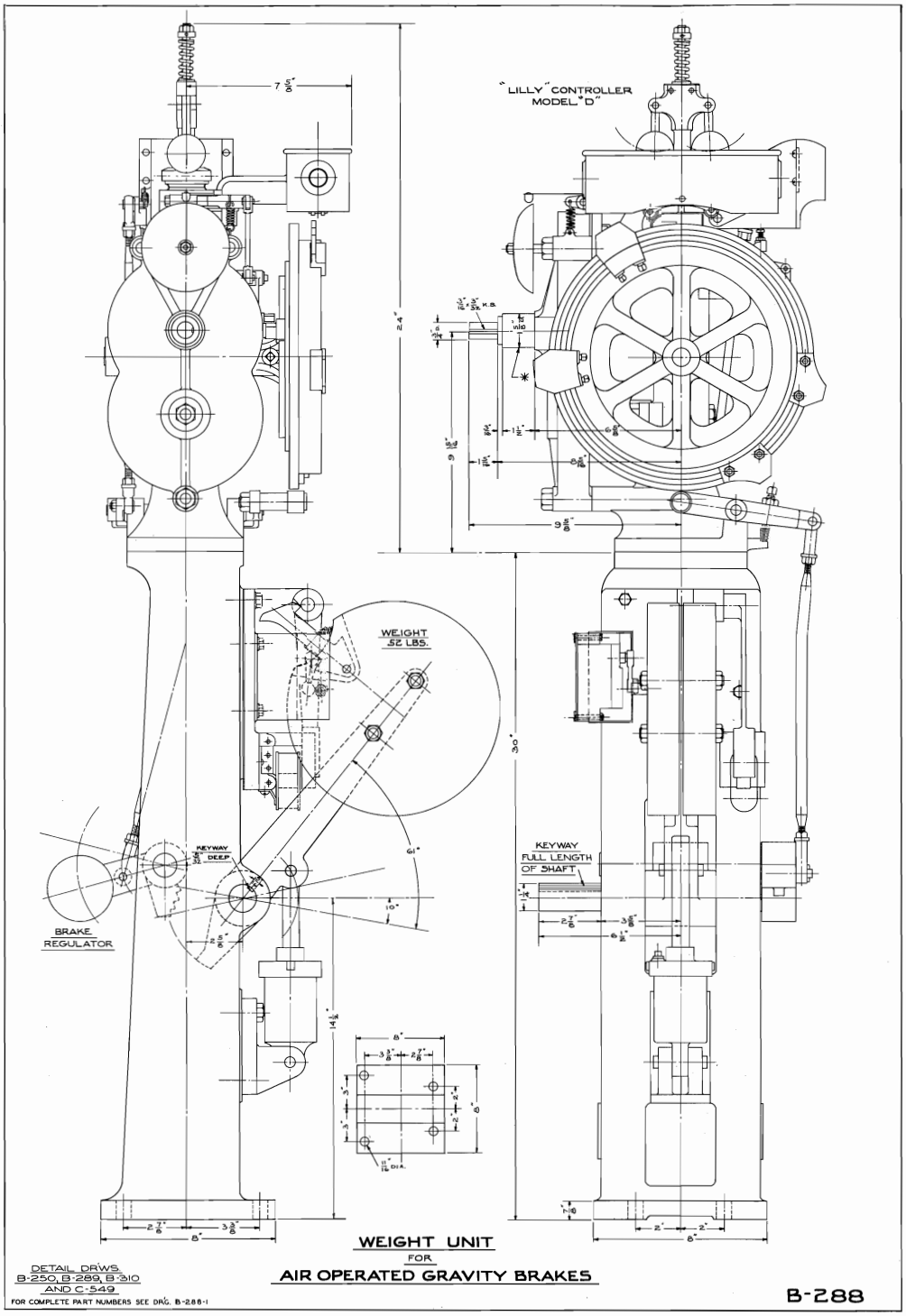

FIG. 18 — Weight unit as shown in Figs. 16 and 17.

The Lilly Controller can be assembled right hand as shown, or left hand (see Fig. 3), and it can be mounted on the pedestal with the cam dial over the weight or opposite.

The weight shaft which has a keyway the full length, can be extended from either side of the pedestal by slackening a set-screw in the arm hub, and driving the shaft in the desired direction.

Scale of the drawing, 1" = 8".

*The Diameter of the concentric BOSS that carries the drive shaft was originally 1.5 inches. For the later CONTROLLERS it is 1.625 inches. This should be checked if an angle drive is to be used.

THE WEIGHT, SHAFT, AND MAGNETIC LATCH OF THE WEIGHT UNITS SHOWN IN FIGS. 16 TO 21

78. The weight provides the energy equivalent to that of a very large solenoid, yet a very small amount of current is sufficient to hold the magnetic latch, and it releases instantly when the circuit is opened.

79. Provision should be made to raise the weight by a lever placed near the hoistman, this lever being arranged so that it cannot accidentally prevent the weight from dropping in an emergency. It is desirable to have the weight re-setting lever interlocked with the brake lever when possible, to insure that the brake lever will be in the brake setting position before the emergency weight can be raised. An electrical interlock switch is located beside the weight, and it may be connected in any suitable manner.

80. A shaft projects from the side of the pedestal to which an arm is to be keyed to actuate the brake engine valves, and slotted rod heads or their equivalent may be used for the weight connection and the hoistman's connection to permit the brake to be applied by either without interference from the other. When the hoistman's control is through a slotted connection, it is necessary to arrange a latch or other device to release the brake, unless it is permissible to have the safety device move the hoistman's lever.

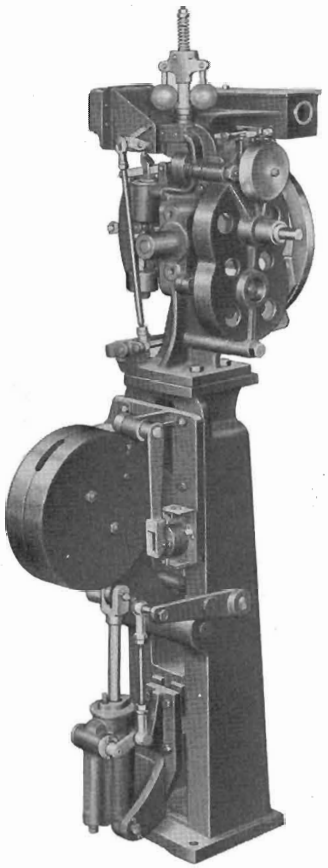

Fig. 19.

FIGS. 19 and 20—Weight unit for electric hoist with air operated gravity brake.

A 52 lb. weight on an arm at a 10" radius is held up by the magnetic latch, and when the electric circuit is opened, the weight drops at a rate controlled by the regulating cylinder, the by-pass valve of which is actuated by the Lilly Controller. See Fig. 36, and Pars. 73 to 80, and 169 to 179.

The controller illustrated is provided with man-safety equipment.

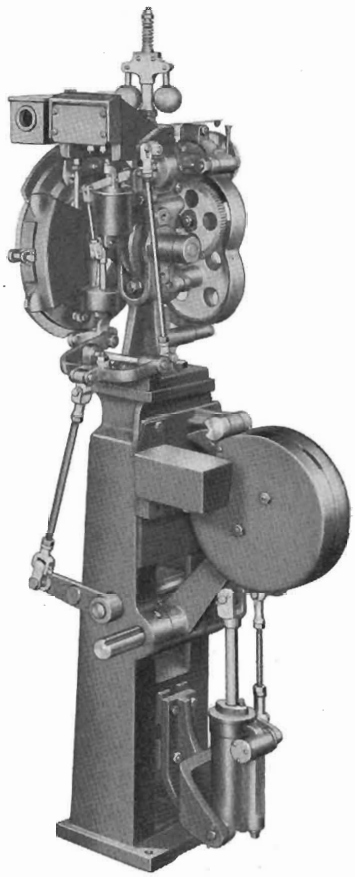

Fig. 20.

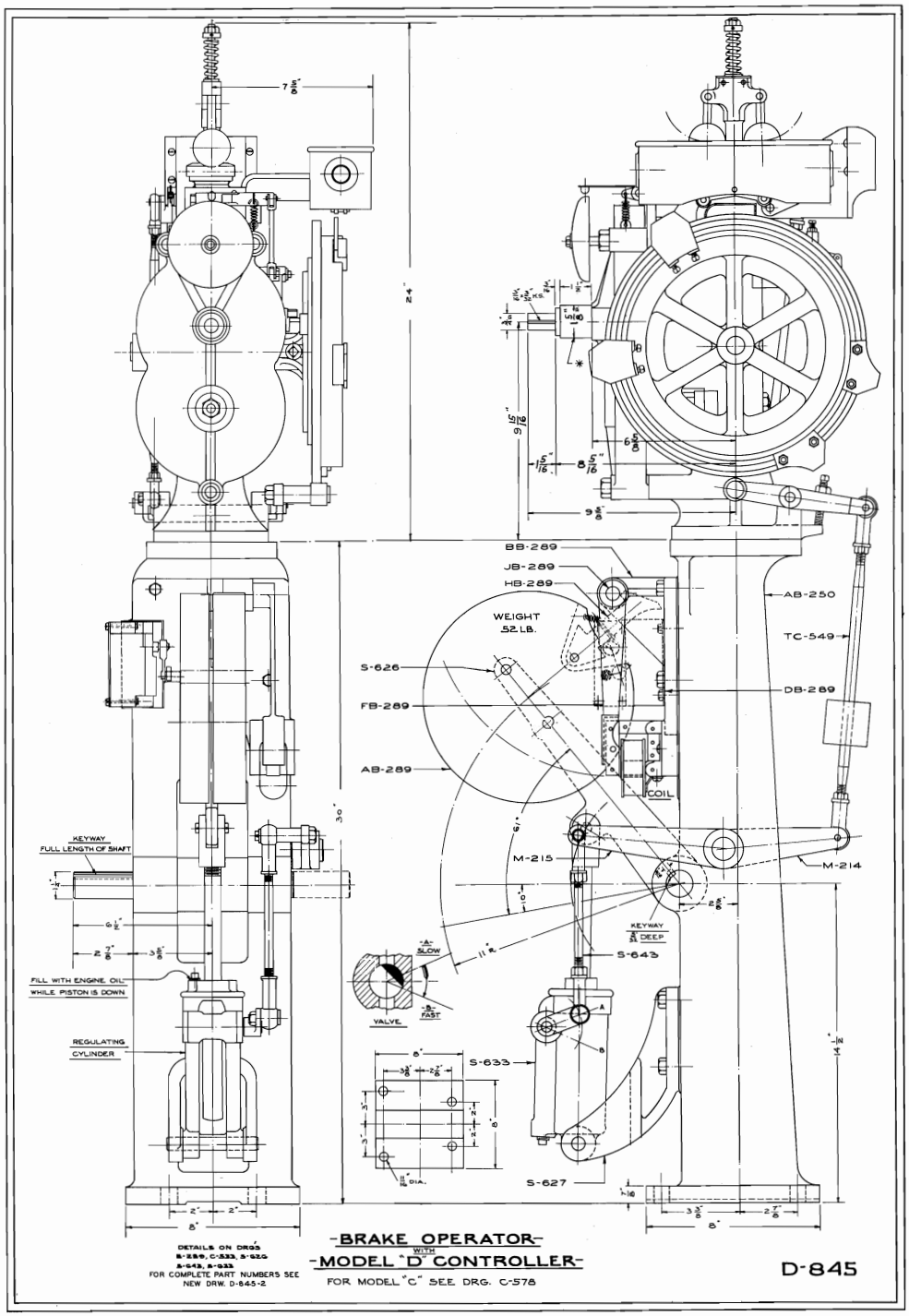

FIG. 21—Weight Unit shown in Figs. 19 and 20.

The Lilly Controller can be assembled right hand or left hand (see Fig. 3), and it can be mounted on the pedestal with the cam dial over the weight or opposite.

The weight shaft which has a keyway the full length can be extended from either side by loosening a set-screw in the hub of the weight arm, and driving the shaft in the desired direction.

Scale of the drawing, 1" = 8".

*The Diameter of the concentric BOSS that carries the drive shaft was originally 1.5 inches. For the later CONTROLLERS it is 1.625 inches. This should be checked if an angle drive is to be used.

GEAR COMBINATIONS AND METHOD OF SELECTING

81. In order that the governor may be driven at the proper speed for full hoist speed, and that the largest available portion of the cam dial will be used for the complete trip, it is necessary to provide gearing within the Lilly Controller to suit the conditions under which it is to operate, and twelve standard combinations of gears are available for the purpose. These are tabulated, and by the use of a simple formula the proper gear combination may be quickly determined to suit any given conditions.

82. The information necessary to determine the proper gear combination may be given in either of two ways. (In either case allow for deepening the shaft, should that be likely at a future time.)
(a) Maximum R.P.M. of drum, and total number of turns or revolutions per trip.
(b) Maximum rope speed, and total amount of rope to be wound.

(A) Divide the number of revolutions per trip (r), by the max. R.P.M. $= \frac{r}{RPM} = T.$

— or —

(B) Divide the total amount of rope to be wound (feet "f") by the max. rope speed (feet per min.) $= \frac{f}{FPM} = T.$

83. Referring to the gear table, glance down the second column until the number is found that is as great, or the next greater than "T." This will indicate the correct gear combination to be selected, and its number will be found opposite in the third column. The correct drive speed for any combination will be found in the first column, opposite the number of the combination. The controller should be geared to the hoist so that at the maximum normal hoist speed the controller will be driven at approximately the speed specified, but not faster.

TABLE OF GEAR COMBINATIONS FOR MODEL D CONTROLLER

84. The worm-wheel has 96 teeth. A single-thread worm is used for all combinations except No. 1 and No. 2, which have a double-thread worm and wheel.

Drive Speed r.p.m.	Time in Min. "T" for 86 Rev. of Worm	Combination Number	GEARS			
			Governor Shaft	Drive Shaft	Drive Shaft	Worm Shaft
138	.31	1	40	80	60	60
	.43	2	40	80	50	70
	.62	3	40	80	60	60
	.86	4	40	80	50	70
	1.25	5	40	80	40	80
	1.87	6	40	80	30	90
	2.5	7	40	80	24	96
	3.1	8	40	80	20	100
92	3.75	9	30	90	24	96
	4.7	10	30	90	20	100
69	6.2	11	24	96	20	100
55	7.7	12	20	100	20	100

85. Example—Select the gear combination for a Model D Lilly Controller for a hoist having a drum speed of 40 R.P.M., and making 60 revolutions per trip.

Solution—60/40=1.5. As this will be found to come between the figures in the second column for number five and six gear combinations, No. 6 should be chosen. In the first column the drive speed calls for 138 R.P.M., and the drive shaft of the controller should be driven at that speed for the maximum normal speed of the hoist.

TRIPS OF UNUSUALLY LONG DURATION

86. The standard gear combinations provide for usual conditions of speed and travel, but when the trip is exceptionally long, or the speed exceptionally slow, it is sometimes necessary to install special gears. These are usually designed to suit the specific installation. The Logan Actuator Co. should be consulted regarding any proposed installation that is beyond the scope of the standard gear combinations.

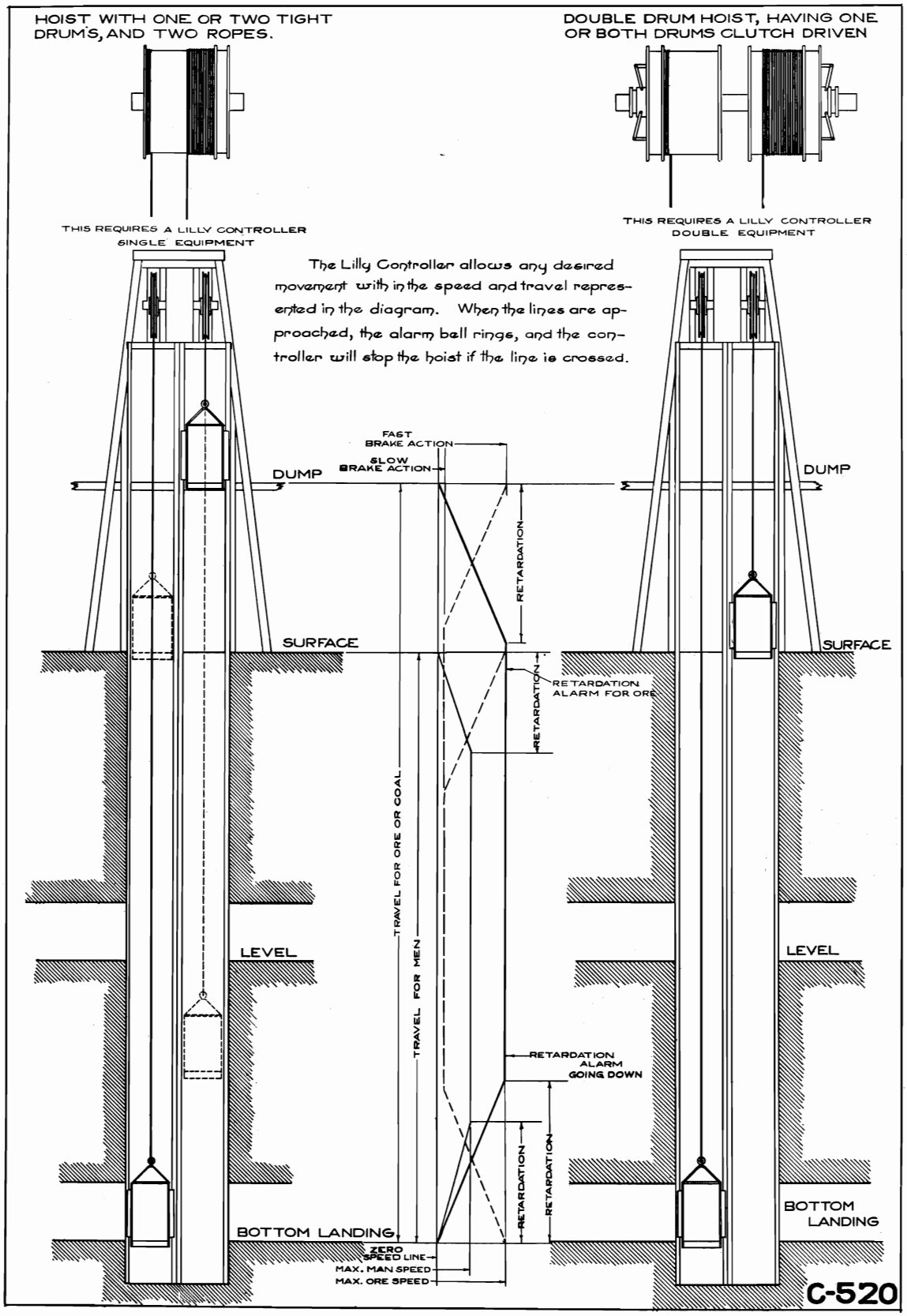

FIG. 22—This diagram shows the relative positions of the cages when handling men, both for a single-drum with two ropes; and for double-drums, either or both being clutch driven. It also indicates the theoretical limit of speed and travel permitted by the Lilly Controller, both for men and for ore or coal, and shows how the brake action is gradually quickened as the speed is reduced near the ends of travel.

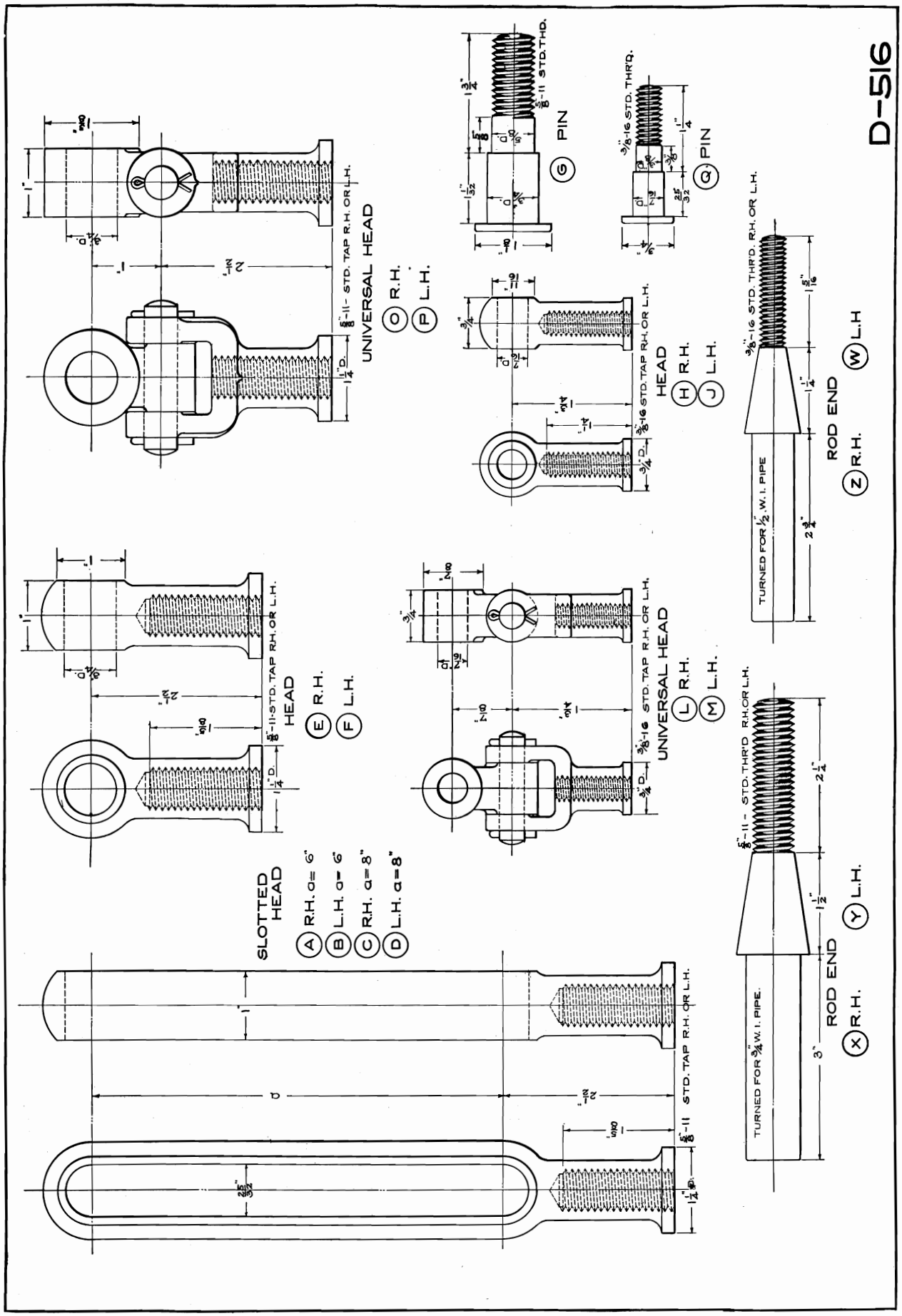

FIG. 23—Standard fittings carried in stock. Very convenient for making up connections for Lilly Controller installations. Each part may be designated by a letter, simplifying telegraphic orders. Further details are given in Bulletin No. 635-B. Scale 6" = 1 ft.

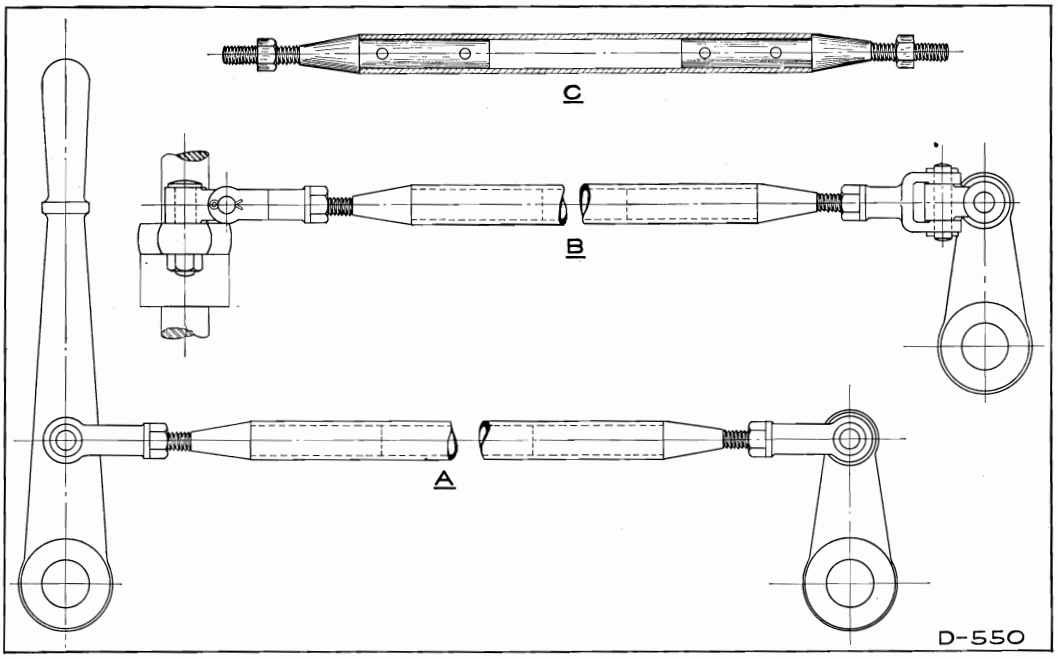

FIG. 24-A—**A** shows a rod made from our standard fittings, connecting a lever with an arm movable in the same plane. **B** shows a connection between two arms movable in right angle planes. **C** shows the method of making up the rod proper. The rod ends are made to fit standard pipe, but before attempting to force them in the pipe, the size of the latter should be checked to make sure that the fit is correct, and the ends should be carefully squared, preferably in a lathe.

The end of the pipe should then be heated red hot, and the rod end driven in by using a sleeve having an internal taper at one end to fit the taper on the rod end. Do not drive on the threaded portion, as it would very likely damage it. As soon as the pipe is cooled, two small holes should be drilled, and rivets put in, after which the exterior may be finished by filing and polishing.

When the rod is to be accurately adjustable, a right hand thread should be used at one end and a left hand thread at the other. It will be observed that the fittings are made up both right hand and left hand, and a single letter identifies each fitting.

INSTRUCTIONS FOR ORDERING MODEL D LILLY CONTROLLERS AND EQUIPMENT

87. When ordering Model D Lilly Controllers the following information is required:

Specify:

88. —Whether the controller is to be assembled right or left hand. (See Figs. 1—2—3.)

89. —Gear Combination required. Or,—the rope speed and number of feet of rope to be wound, or—the max. R.P.M. of the drum and total number of turns per trip. (See Pages 19 and 20.)

90. —Man-safety equipment when required,—and state whether it is to be used for a hoist drum handling one cage or two cages in balance. When two levers are required, state whether they are to be mounted on one base or on independent bases.

91. —If electrical contacts are required instead of a gong. (For installations having remote control, such as blast furnace skip hoists, the electrical contacts are frequently desirable to operate a warning installed near the skip tender.)

92. —If auxiliary equipment is required, and if so refer to it by Figure number in this catalog. (D-75).

93. —The "hand" of auxiliary equipment which may be assembled right or left hand.

94. —If the controller is to be assembled on the auxiliary equipment in a position other than illustrated, such as—"Controller with cam dial over weight, instead of as shown in Fig. 19."

95. —The *current characteristics* of all *coils*.

96. —Any special features desired.

TABLES

FEET OR METERS

Per Second	Per Minute	Per Second	Per Minute	Per Second	Per Minute	Per Second	Per Minute
1	60	21	1260	41	2460	61	3660
2	120	22	1320	42	2520	62	3720
3	180	23	1380	43	2580	63	3780
4	240	24	1440	44	2640	64	3840
5	300	25	1500	45	2700	65	3900
6	360	26	1560	46	2760	66	3960
7	420	27	1620	47	2820	67	4020
8	480	28	1680	48	2880	68	4080
9	540	29	1740	49	2940	69	4140
10	600	30	1800	50	3000	70	4200
11	660	31	1860	51	3060	71	4260
12	720	32	1920	52	3120	72	4320
13	780	33	1980	53	3180	73	4380
14	840	34	2040	54	3240	74	4440
15	900	35	2100	55	3300	75	4500
16	960	36	2160	56	3360	76	4560
17	1020	37	2220	57	3420	77	4620
18	1080	38	2280	58	3480	78	4680
19	1140	39	2340	59	3540	79	4740
20	1200	40	2400	60	3600	80	4800

Table A. Equivalent Speed in Feet or Meters per second and per minute.

DRUM DIAMETER IN METERS	CIRCUM-FERENCE IN METERS	EQUIVALENT DIAMETER IN FEET	CIRCUM-FERENCE IN FEET
1	3.14	3.28	10.30
1.5	4.71	4.92	15.46
2	6.28	6.56	20.61
2.5	7.85	8.20	25.76
3	9.42	9.84	30.91
3.5	11.00	11.48	36.07
4	12.57	13.12	41.22
4.5	14.14	14.76	46.37
5	15.71	16.40	51.52
5.5	17.28	18.04	56.67
6	18.85	19.68	61.83
7	21.99	22.97	72.16
8	25.13	26.25	82.47
9	28.27	29.53	92.77
10	31.42	32.81	103.08
11	34.56	36.09	113.38
12	37.70	39.37	123.68
13	40.84	42.65	133.99
14	43.98	45.93	144.29

Table B. Conversion Table. Drum Diameters and Circumferences in Meters and Feet.

DRUM DIAMETER IN FEET	DRUM CIRCUM-FERENCE IN FEET	EQUIVALENT DRUM DIAMETER IN METERS	DRUM CIRCUM-FERENCE IN METERS	DRUM DIAMETER IN FEET	DRUM CIRCUM-FERENCE IN FEET	EQUIVALENT DRUM DIAMETER IN METERS	DRUM CIRCUM-FERENCE IN METERS
1	3.14	.31	.96	19	59.69	5.80	18.18
1.5	4.71	.46	1.44	20	62.83	6.10	19.13
2	6.28	.61	1.91	21	65.97	6.40	20.09
2.5	7.85	.76	2.39	22	69.12	6.71	21.05
3	9.42	.92	2.87	23	72.26	7.02	22.00
3.5	11.00	1.07	3.35	24	75.40	7.33	22.96
4	12.57	1.22	3.83	25	78.54	7.63	23.92
4.5	14.14	1.37	4.31	26	81.68	7.93	24.87
5	15.71	1.52	4.78	27	84.82	8.24	25.83
5.5	17.28	1.68	5.27	28	87.97	8.54	26.79
6	18.85	1.83	5.74	29	91.11	8.84	27.74
7	21.99	2.13	6.70	30	94.25	9.15	28.70
8	25.13	2.44	7.65	31	97.39	9.45	29.66
9	28.27	2.74	8.61	32	100.53	9.76	30.61
10	31.42	3.05	9.56	33	103.67	10.06	31.57
11	34.56	3.36	10.52	34	106.81	10.36	32.53
12	37.70	3.66	11.48	35	109.96	10.68	33.48
13	40.84	3.97	12.44	36	113.10	10.97	34.44
14	43.98	4.27	13.39	37	116.24	11.27	35.40
15	47.12	4.57	14.35	38	119.38	11.58	36.35
16	50.27	4.87	15.31	39	122.52	11.88	37.31
17	53.41	5.18	16.26	40	125.66	12.20	38.27
18	56.55	5.49	17.22				

Table C. Conversion Table. Drum Diameters and Circumferences in Feet and Meters.

HOISTING ROPES SAFETY FACTOR FOR VARIOUS DEPTHS OF SHAFTS	MINIMUM SAFETY FACTOR FOR NEW ROPE	MINIMUM SAFETY FACTOR WHEN ROPE MUST BE DISCARDED	PERCENTAGE REDUCTION
500 Ft. or Less	8	6.4	20
500 to 1000 Ft.	7	5.8	17
1000 to 2000 Ft.	6	5.0	16½
2000 to 3000 Ft.	5	4.3	14
3000 and over	4	3.6	10

The above factors are based upon an actual safety factor of four, and are made greater for shallower shafts because there the acceleration stresses are normally greater and in deep shafts the elasticity of the rope acts to minimize the shock of starting and the stresses of accelerating.

Table D. Safety Factor for Hoisting Ropes.

Diameter, Inches	Approx. Circumference, Inches	Weight per Foot, Lbs.	Iron			Crucible Steel			Extra Strong Crucible Steel		Plow Steel		Crucible and Plow Steel, Min. Size of Sheave, Feet	Monitor Plow Steel		
			Breaking Strength, Tons, (2000 Lbs.)	Safe Working Load, Tons	Minimum Size of Sheave, Feet	Breaking Strength, Tons, (2000 Lbs.)	Safe Working Load, Tons	Minimum Size of Sheave, Feet	Breaking Strength, Tons (2000 Lbs.)	Safe Working Load, Tons	Breaking Strength, Tons, (2000 Lbs.)	Safe Working Load, Tons		Breaking Strength, Tons, (2000 Lbs.)	Safe Working Load, Tons	Minimum Size of Sheave, Feet
2¼	7⅛	8.00	72.0	14.4	14.0	133.0	26.6	9.0	160.0	32.0	186.0	37.0	9.0	210.0	42.0	9.0
2	6¼	6.30	55.0	11.0	12.0	106.0	21.2	8.0	123.0	24.6	140.0	28.0	8.0	166.0	33.0	8.0
1⅞	5¾	5.55	50.0	10.0	12.0	96.0	19.0	8.0	112.0	22.4	127.0	25.0	8.0	150.0	30.0	8.0
1¾	5½	4.85	44.0	8.8	11.0	85.0	17.0	7.0	99.0	19.8	112.0	22.0	7.0	133.0	27.0	7.0
1⅝	5	4.15	38.0	7.6	10.0	72.0	14.4	6.5	83.0	16.6	94.0	19.0	6.5	110.0	22.0	6.5
1½	4¾	3.55	33.0	6.6	9.0	64.0	12.8	6.0	73.0	14.6	82.0	16.0	6.0	98.0	20.0	6.0
1⅜	4¼	3.00	28.0	5.6	8.5	56.0	11.2	5.5	64.0	12.8	72.0	14.0	5.5	84.0	17.0	5.5
1¼	4	2.45	22.8	4.6	7.5	47.0	9.4	5.0	53.0	10.6	58.0	12.0	5.0	69.0	14.0	5.0
1⅛	3½	2.00	18.6	3.7	7.0	38.0	7.6	4.5	43.0	8.6	47.0	9.4	4.5	56.0	11.0	4.5
1	3	1.58	14.5	2.9	6.0	30.0	6.0	4.0	34.0	6.8	38.0	7.6	4.0	45.0	9.0	4.0
⅞	2¾	1.20	11.8	2.4	5.5	23.0	4.6	3.5	26.0	5.2	29.0	5.8	3.5	35.0	7.0	3.5
¾	2¼	0.89	8.5	1.7	4.5	17.5	3.5	3.0	20.2	4.0	23.0	4.6	3.0	26.3	5.3	3.0
⅝	2	0.62	6.0	1.2	4.0	12.5	2.5	2.5	14.0	2.8	15.5	3.1	2.5	19.0	3.8	2.5
½	1½	0.39	3.9	0.78	3.0	8.4	1.68	2.0	9.2	1.84	10.0	2.0	2.0	12.1	2.4	2.0

Table E. Strength of rope and minimum size of sheave.

Tables D and E are based upon data that we believe to be reliable. The other tables are simply mathematical and are close enough for ordinary calculations.

TABLES

METRIC EQUIVALENTS

LENGTH

1 Centimeter	=	.3937	Inch	1 Inch	=	2.54	Centimeters
1 Meter	=	39.37	Inches	1 Inch	=	.0254	Meter
1 Meter	=	3.28	Feet	1 Foot	=	.3048	Meter
1 Meter	=	1.094	Yards	1 Yard	=	.9144	Meter
1 Kilometer	=	.621	Mile	1 Mile	=	1.61	Kilometers

WEIGHT

1 Gram	=	15.432	Grains	1 Ounce	=	28.35	Grams
1 Gram	=	.0353	Ounce	1 Lb.	=	.454	Kilogram
1 Kilogram	=	2.2046	Lbs.	1 Ton (Short) 2000 Lb.	=	907.20	Kilograms
1 Kilogram	=	.0011	Ton (Short)	1 Ton (Short)	=	.907	Metric Ton
1 Metric Ton	=	1.1023	Tons (Short)	1 Ton (Long) (2240 Lb.)	=	1016.04	Kilograms
1 Grain	=	.0648	Gram	1 Ton (Long)	=	1.016	Metric Tons

Table F. Metric and English Equivalents.

INCLINE TABLE

DEGREES	INCLINE PER 100 FT. OR %	DEGREES	INCLINE PER 100 FT. OR %
1	1.745	24	40.674
2	3.490	25	42.262
3	5.234	26	43.837
4	6.976	27	45.399
5	8.715	28	46.947
6	10.453	29	48.481
7	12.187	30	50.000
8	13.917	31	51.504
9	15.643	32	52.992
10	17.365	33	54.464
11	19.081	34	55.919
12	20.791	35	57.358
13	22.495	36	58.778
14	24.192	37	60.181
15	25.882	38	61.566
16	27.564	39	62.932
17	29.237	40	64.279
18	30.902	41	65.606
19	32.557	42	66.913
20	34.202	43	68.200
21	35.837	44	69.466
22	37.461	45	70.711
23	39.073		

Table G. Incline Table.

CONVERSION TABLES

English to Metric

To Convert	To	Multiply By
INCHES	CENTIMETERS	2.5001
FEET	METERS	0.3048
YARDS	METERS	0.9144
MILES	KILOMETERS	1.60935
SQUARE INCHES	SQUARE CENTIMETERS	6.4516
SQUARE FEET	SQUARE METERS	0.0929
SQUARE MILES	SQUARE KILOMETERS	2.58899
ACRES	SQUARE KILOMETERS	0.004047
CUBIC INCHES	CUBIC CENTIMETERS	16.3934
CUBIC FEET	CUBIC METERS	0.02834
GALLONS (U.S.)	LITRES	3.785
GALLONS (Imperial)	LITRES	4.5431
POUNDS (Avoirdupois)	KILOGRAMS	0.4536
TONS (Short, 2000 Lb.)	KILOGRAMS	905.79
TONS (Long, 2240 Lb.)	KILOGRAMS	1014.4848

Metric to English

CENTIMETERS	INCHES	.3937
METERS	FEET	3.2808
METERS	YARDS	1.09361
KILOMETERS	MILES	0.62137
SQUARE CENTIMETERS	SQUARE INCHES	0.1550
SQUARE METERS	SQUARE FEET	10.7641
SQUARE KILOMETERS	SQUARE MILES	0.38611
SQUARE KILOMETERS	ACRES	247.114
CUBIC CENTIMETERS	CUBIC INCHES	0.0610
CUBIC METERS	CUBIC FEET	35.3140
LITRES	GALLONS (U.S.)	0.2642
LITRES	GALLONS (Imperial)	0.2201
KILOGRAMS	POUNDS (Avoirdupois)	2.20462
KILOGRAMS	TONS (Short, 2000 Lb.)	0.001102
KILOGRAMS	TONS (Long, 2240 Lb.)	0.000984

Table H. Conversion Table. English to Metric and Metric to English.

TENSION ON ROPE FOR INCLINE PLANES

ANGLE DEGREES	TENSION FOR 2000 LB. LOAD
90	2,000
80	1,970
70	1,880
60	1,732
50	1,552
45	1,414
42.5	1,350
40	1,286
37.5	1,216
35	1,148
32.5	1,074
30	1,000
27.5	922
25	846
22.5	764
20	684
17.5	600
15	518
12.5	432
10	348
8	278
7	242
6	208
5	174
4	138
3	104
2	70
1	34

Table I. Tension on rope for incline.

WEIGHT OF WATER
at 62° F.

Volume	Weight
1 CU. FOOT	62.355 LB.
1 CU. INCH	.036 LB.
1 CU. INCH	.576 OZ.
1 GALLON (U.S.)	8.33 LB.
1 GALLON (IMP.)	9.998 LB.
.12004 GALLON (U.S.)	1.00 LB.
12.0048 GALLONS (U.S.)	100.00 LB.
240.096 GALLONS (U.S.)	1 SHORT TON (2000 LB.)
268.908 GALLONS (IMP.)	1 LONG TON (2240 LB.)
1 LITRE	2.201 LB.

Table J. Weight of Water.

Short and Long Tons. U. S. and Imp. Gallons.

CONVERSION TABLE

To Convert	To	Multiply By
SHORT TONS (2000 Lb.)	LONG TONS (2240 Lb.)	.893
LONG TONS	SHORT TONS	1.12
U. S. GALLONS (231 Cu. In.)	IMPERIAL GALLONS (277.274 Cu. In.)	.8331
IMPERIAL GALLONS	U. S. GALLONS	1.2003

Table K. Conversion Table. Short and Long Tons. U. S. and Imp. Gals.

TYPICAL INSTALLATIONS

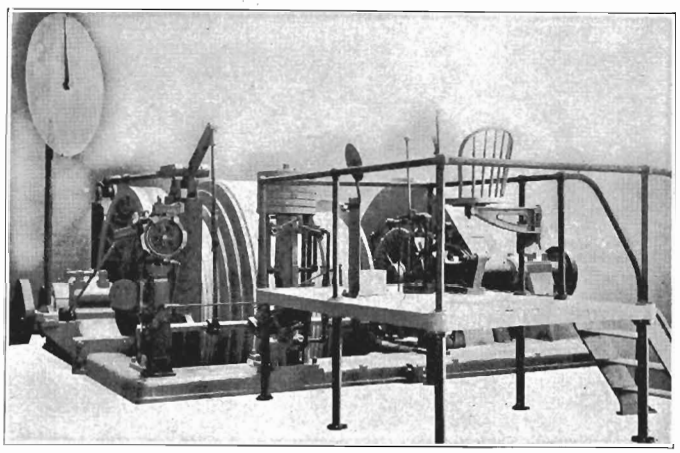

FIG. 25—Lidgerwood electric hoist equipped with a Lilly Controller and unit for air operated gravity brakes. The Drive is by shaft and gears from the drum shaft.

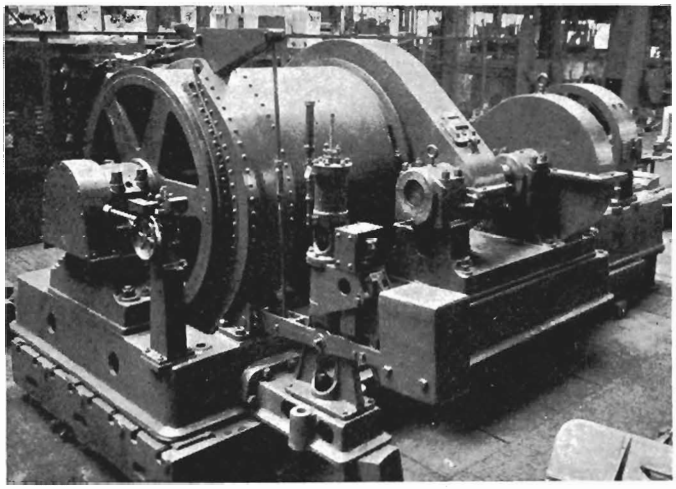

FIG. 26—A Wellman Engineering Co. blast furnace skip hoist equipped with a Lilly Controller which may be seen mounted on a pedestal in the foreground. This is an ideal location, and very accessible.

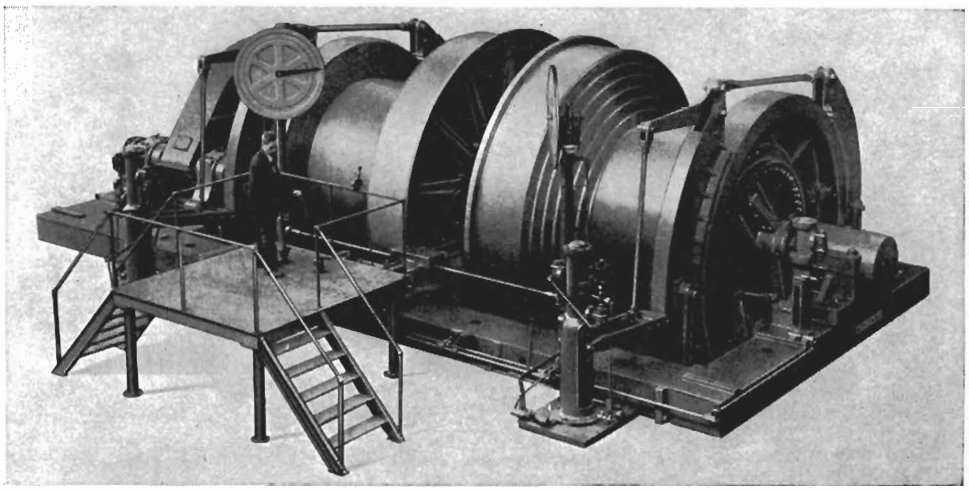

FIG. 27 — A double-drum Allis-Chalmers Electric Hoist equipped with two Model D Lilly Controllers. The Lilly Controllers are mounted behind the platform, and the man-safety levers are mounted on the hand rail in front of the hoistman.

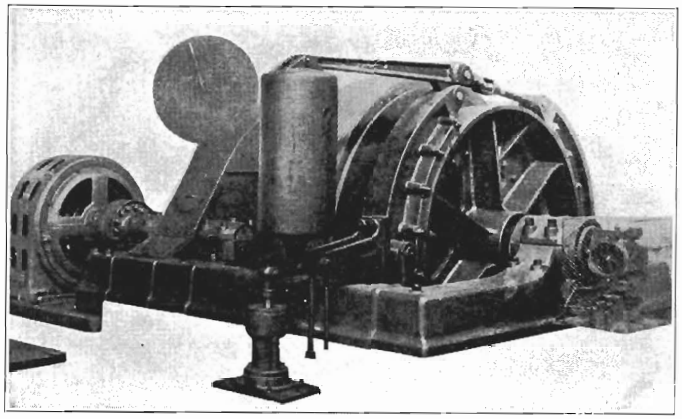

FIG. 28—An Ottumwa electric hoist with a Lilly Controller mounted on a bracket and driven from the drum shaft by spur gears. The Controller is enclosed by a wire cage to prevent interference or damage.

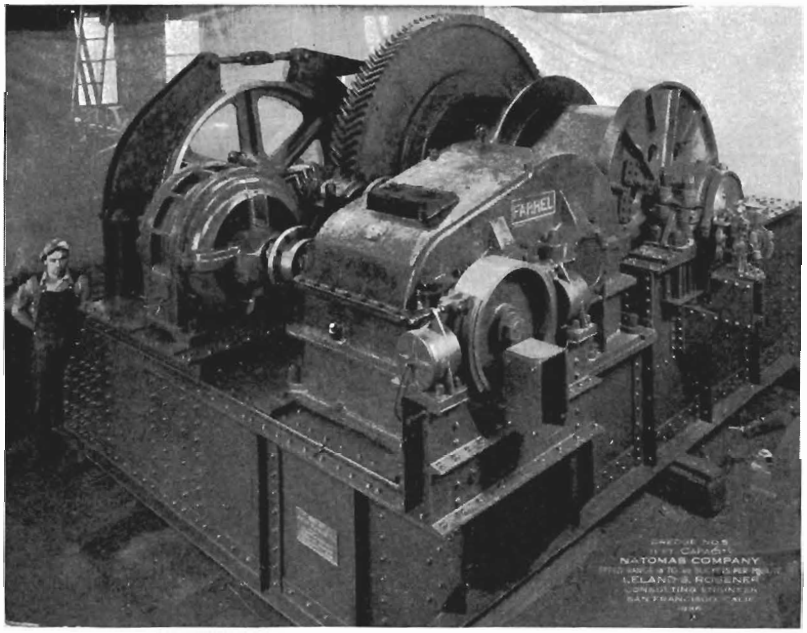

FIG. 29—A "ladder hoist" for a large dredge. The Lilly Controller is in view at the right.

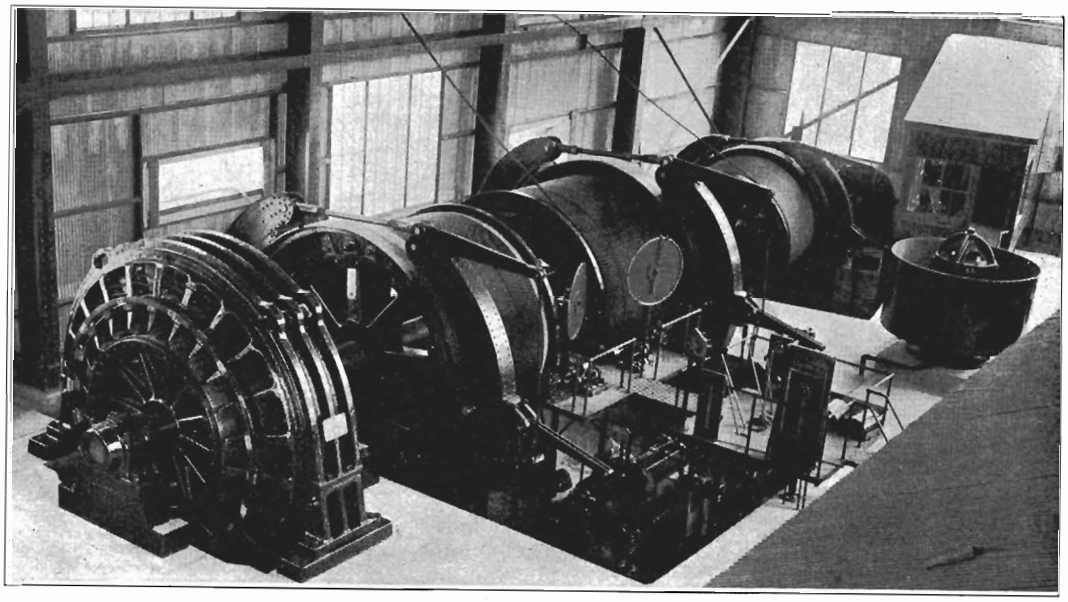

FIG. 30—Two Nordberg electric hoists (a double-drum and a single-drum), with Ward-Leonard control, and equipped with Lilly Controllers which may be seen above the platform near the indicators of one hoist.

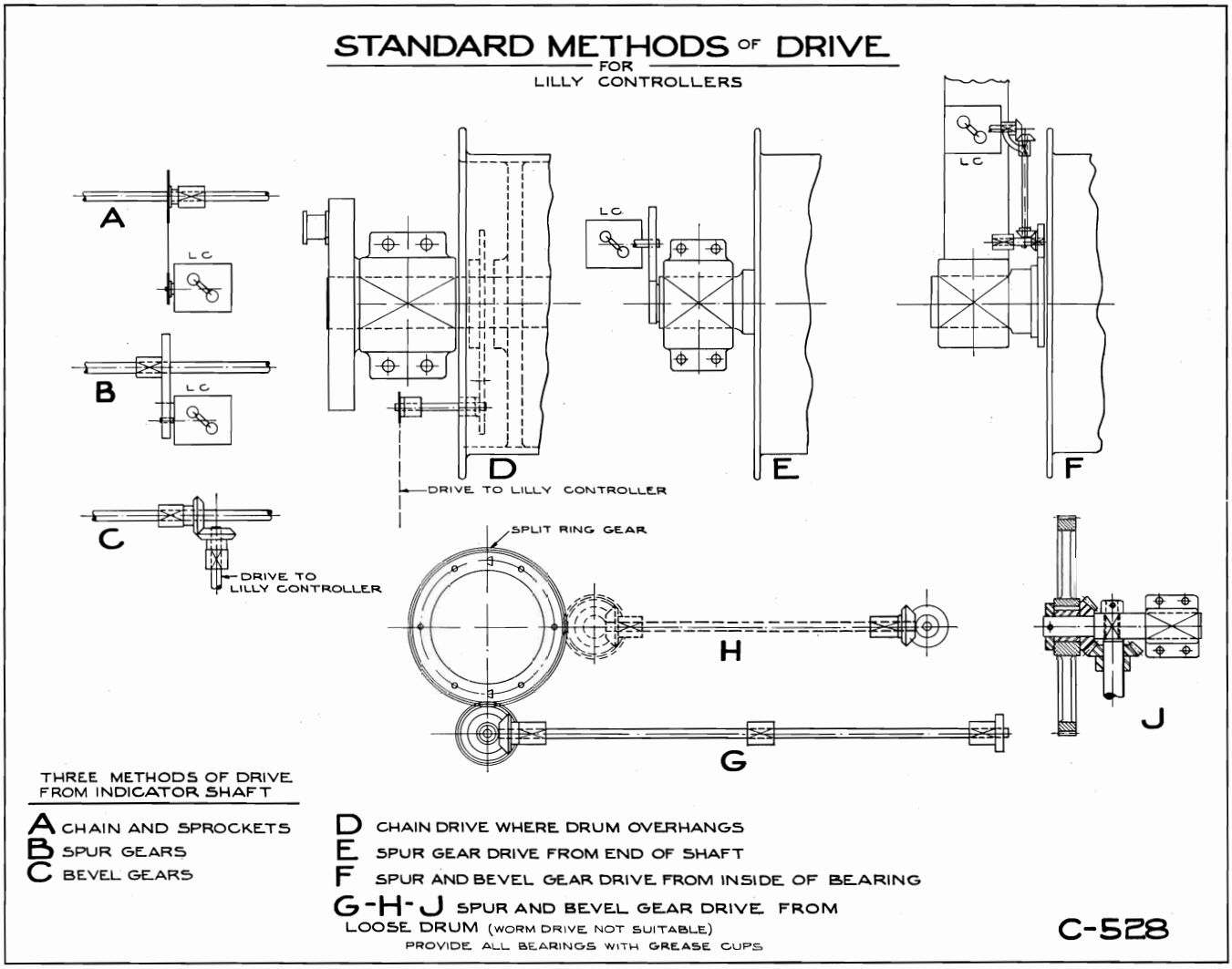

FIG. 31—Drives. See Paragraphs 97 to 109.

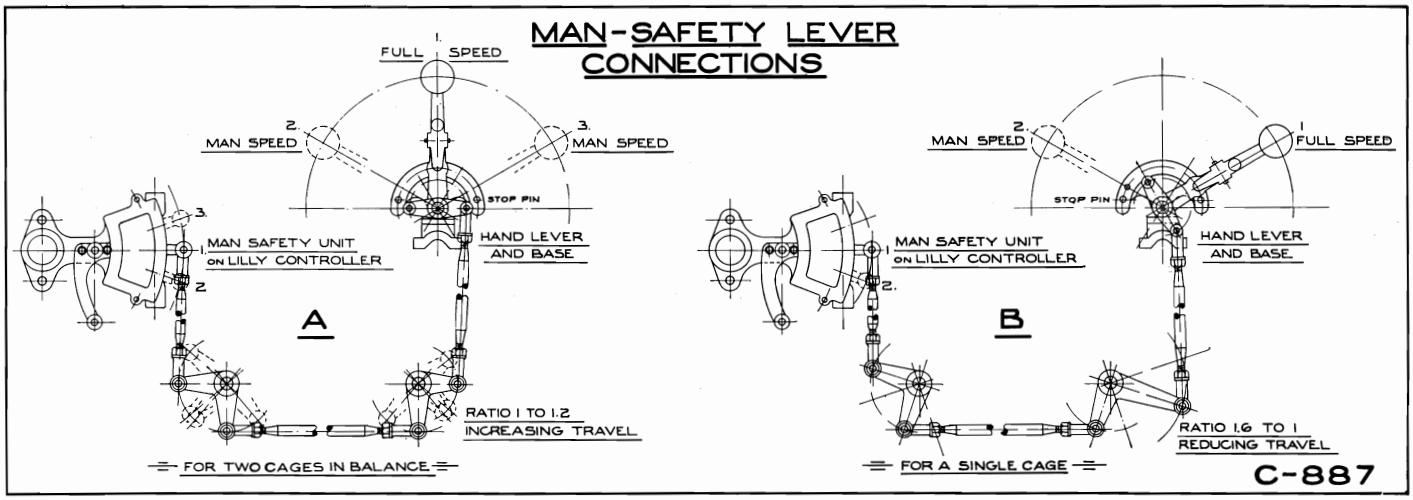

FIG. 32—Connections for Man-safety levers. See Figs. 5, 6, and 7, Paragraphs 59 to 67, and 140 to 148.

INSTRUCTIONS

THE LOCATION OF A LILLY CONTROLLER ON A HOIST

97. The Lilly Controller and auxiliary equipment should be so located on a hoist, that it will be accessible, and well protected against water, oil or tar from the ropes, and mechanical injury, which might be caused by a rope breaking, or when repairing or adjusting the brakes. Protection against damage, and accessibility for oiling, adjusting and inspecting are of prime importance, and should not be overlooked.

98. The drive for the Lilly Controller, and the connections to the brake mechanism and all other control elements should receive careful thought, and a location for the controller should be selected that will make possible the simplest and most economical installation.

99. Where there is danger of the Lilly Controller being damaged by water, oil or tar from the ropes, or excessive dust and grit, a guard or case should be provided for its protection.

100. Lilly Controllers should *never be installed on the floor or in inaccessible corners,* or where an attendant inspecting, oiling or adjusting them would be endangered by other moving parts.

101. By placing the controllers in desirable locations and at a convenient height, the inspecting, oiling, and adjusting are greatly facilitated, and they are less likely to be neglected.

THE DRIVE FOR THE LILLY CONTROLLER

102. The Lilly Controller must be positively driven in ratio with the hoist drum (or reel) by cut gears or by roller chain and cut sprockets. In some locations, positive gear drives are mandatory.

103. It is frequently possible and convenient to obtain a drive from the end of the drum shaft of a single drum hoist having a tight drum. In many cases, however, it is preferred to arrange a drive from another part of the drum shaft, and where the depth indicator is driven by rugged gearing, it may provide a suitable drive for the Lilly Controller.

104. Some specifications, however, call for completely independent drives for the depth indicators and the Lilly Controllers, so that if either drive should go out of order it will not interfere with the performance of the other.

105. The drive from a free drum is usually transmitted by means of a ring gear attached to the drum hub, and both the depth indicator and the Lilly Controller are driven from the ring gear, either by a single gear or by an independent gear for each.

106. Drives should in all cases be arranged so that they will not be affected by lateral motion of the drum. Some forms of worm gear drives for depth indicators, and some bevel gear drives are affected by lateral motion of the drum, rendering them unsuitable for driving a governor or a travel limit device. Spur gears or steel roller chain and cut steel sprockets permit lateral motion of the drum to take place without affecting the drive, and they are recommended for that reason.

107. Where the Lilly Controller is installed at a considerable distance from the hoist drum, it is usually best to transmit the drive from the spur gears at the drum through a shaft with bevel gears at one or both ends.

108. In some of the old hoists, it is not possible to use a gear drive or a shaft drive from the drum, and chain and sprockets must be used. In some other installations it is desirable to use chain drive where a gear drive would be expensive or hard to install. Provision should always be made to take up slack as the chain wears, and very long chains should not be used.

109. Only gears or sprockets with machined teeth, and steel roller chain should be used to drive a controller, and all gears, chains, and sprockets should be guarded.

THE MODEL D LILLY CONTROLLER

(Explanation of Diagram, Fig. 33)

110. A—Shows the setting for the various cams on the dial when the drum is at a limit of travel, the dial having traveled to the limit of its movement in the direction of the arrow.

111. It will be observed that the cam for the retarding alarm gong has passed the gong trip, sounding the alarm before reaching the retarding zone. A little further movement brings the retarding cam into contact with the roller of the retarding yoke, moving it downward until the limit of travel is reached. The limit cam then opens one of the limit switches if the hoist is not stopped by the hoistman.

112. B—Shows the connection from the retarding yoke to the overspeed switch, and also the action from the governor to the governor contact which engages with the center finger of the overspeed switch in case of an emergency. The alarm contact on the center finger of the switch is connected by a flexible lead to the upper terminal on the panel, to which the warning circuit should also be connected.

113. The overspeed switch is carried downward by the action of the retarding cam and the retarding yoke, in conformity with normal retardation, and if at any point during retardation the speed is above that for which the cam was profiled, the governor contact will open the switch, the center finger of which is hinged between the outer pair. These fingers are made of insulating material, and the contacts on the two outer fingers are connected by flexible leads with a terminal panel in the Lilly Controller, to which outside connections are made. The center finger carries a conductor that bridges across the contacts on the outer fingers, constituting a double break switch.

114. The purpose of having a small flat spring interposed between the switch finger and the governor contact is to cause the overspeed bell to ring before the overspeed switch opens. By varying the clearance above this spring, the time of warning before opening the overspeed switch may be varied.

115. C—Shows the man-safety light switch, the speed adjustment, and the rollers and engaging mechanism of the man-safety equipment. In the drawing the man-safety arm is in its lowest position, closing the lower lighting switch, carrying the overspeed switch downward the necessary distance to suit the man-speed required, and rocking the roller arm to engage one of the rollers with the man-safety cam indicated on the back of the dial.

116. D—Shows the limit switches and one of the limit cams holding a switch open in an overwound position in the direction of the long arrow. Each cam is offset and engages one roller only. In case that the movement of the dial is so great that the cams come close together for full hoist travel, each cam may be adjusted to function in the opposite direction engaging the rollers by the opposite sides of the cams*. This necessitates reversing the wiring connections at the limit switches, and permits the maximum movement of the dial to be utilized without interfering with the shape of the limit cams.

117. Each limit cam should be set as close as possible to the corresponding limit switch roller when the cage or skip is at the limit of travel, so that further movement of the drum toward the limit will cause the limit switch to open.

*See cam indicated by short arrow approaching same roller from opposite direction.

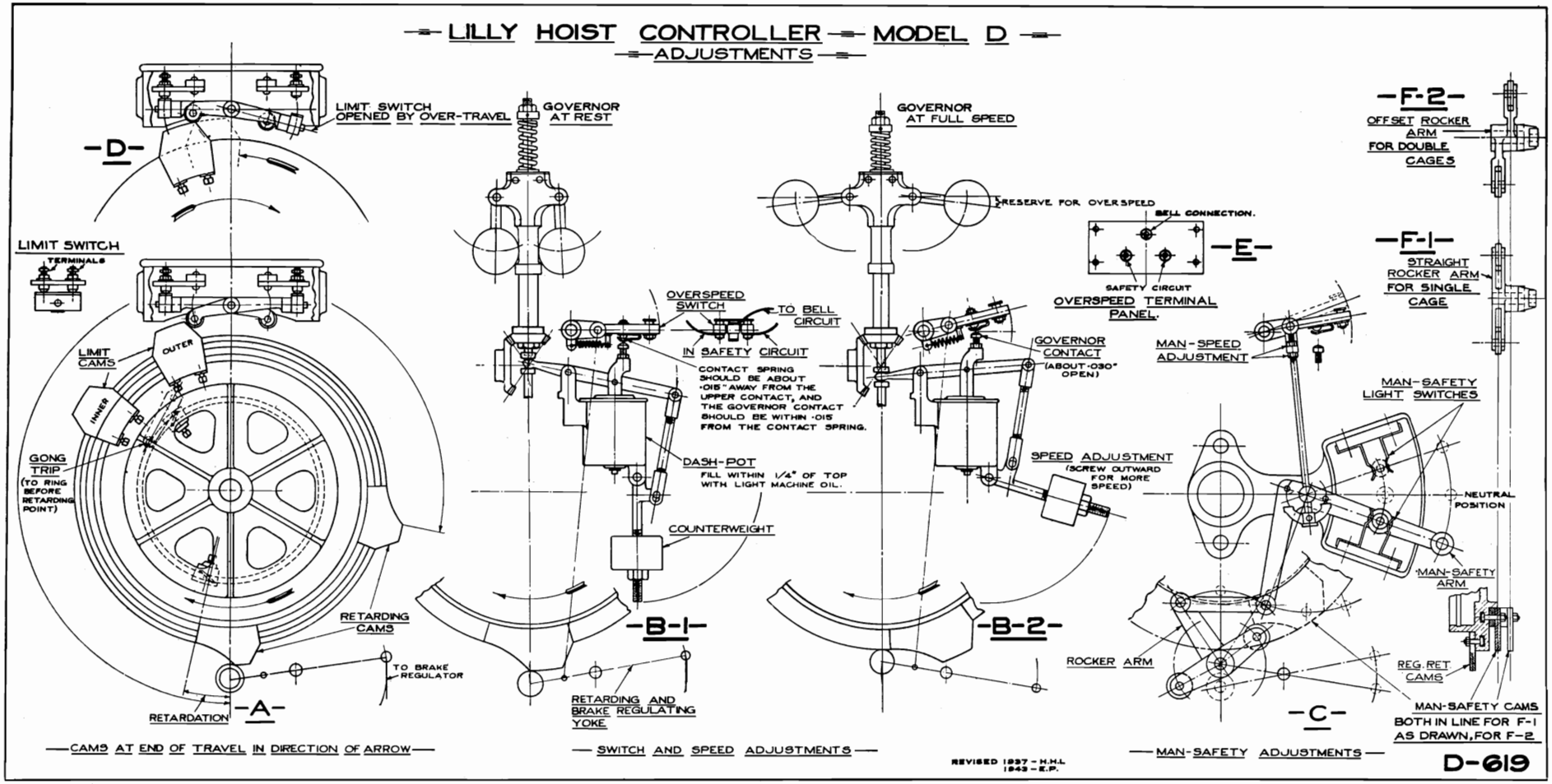

FIG. 33—Adjustments of Model D Lilly Controller. See paragraphs 20 to 22, 49 to 67), and 110 to 148.

CAM PROFILES

118. Fig. 34 shows six cams, each of which is profiled to suit different conditions. The dotted outline shows the shape of the cams as they are furnished from the factory, and the full line shows the finished profile after being fitted at the hoist. The letter "R" indicates the "Retardation Travel," and each cam is shown in the position with relation to the roller that it should always occupy when at the limit of travel.

119. The profile of the cams as furnished may be very nearly right, but they usually have to be fitted on the job to suit the operating conditions.

120. "A" shows a very common cam profile, and indicates that the period of retardation is relatively small as compared with the dial movement, such as hoisting at average speed from a fairly deep shaft.

121. "B" shows a cam profile that indicates a long and very gradual retardation as compared with the depth of the shaft. In balanced hoisting when the power is shut off early and the hoist allowed to coast to the end of travel, the cam will frequently have a profile similar to this.

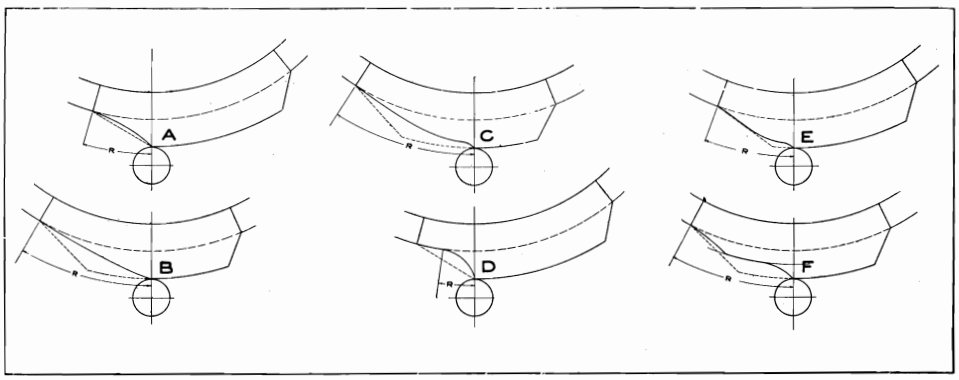

FIG. 34—Cam Profiles. See paragraphs 118 to 126.

122. "C" shows a cam similar to "B," but it indicates that a higher speed is carried near to the limit, and the action of dumping or the application of the brakes brings the hoist quickly to rest.

123. "D" shows a profile that indicates slow hoisting from considerable depth, or hoisting at average speed from a very great depth where the retardation travel is small as compared with the full travel.

124. "E" shows a profile that indicates normal retardation to about quarter speed, then more gradual, and finally a quick stop. This shape of cam frequently results from local conditions in the dump or tipple.

125. "F" shows a profile that may be used for the top or bottom of a shaft when using a single rope on the drum. The object of this shape is to compel the slowing of the hoist at a distance from the limit, and to proceed within that speed toward the limit, finally retarding to the stopping point. Such cams are sometimes necessary because of conditions in the shaft or in the head frame.

126. The cams as furnished are longer than generally required, so that there is ample material to profile them to suit almost any conditions. In case that the cams prove to be longer than necessary, preventing sufficient movement of the controller dial, they may be shortened, but in doing so the back end should be cut with a bevel like the original shape in order to avoid danger of jamming against the roller if the cam should happen to be reset at the wrong side of the roller. If longer cams are necessary, they can be furnished.

ADJUSTING A MODEL D LILLY CONTROLLER

(See Fig. 33)

127. See that all switch contacts are scraped clean, and that the dash-pot is filled to near the top with a medium engine oil.

128. Connect the overspeed warning bell (top center of panel) and also connect the limit switches in the safety circuit. The overspeed switch (outer terminals of panel) may also be connected, but the terminals should be short circuited by a jumper until the cams are profiled.

129. When the governor is inactive at the ends of travel, and the roller against the highest part of a retarding cam, the governor contact should be a short distance away from the alarm contact of the overspeed switch, (usually about .015" to .032"). This adjustment is set in the factory, and should only be changed when necessary to take up wear.

130. (a) Disconnect the brake regulating rod (if connected), leaving the regulating means in position for slow brake application.

131. (b) Remove both retarding cams from the dial and put the nuts back on the bolts so that they cannot back out thru the entering hole and become jammed by the movement of the dial.

132. (c) Set the alarm cams to ring the gong just before reaching the retarding zone, when approaching the end of travel.
(d) Set each limit cam to open its limit switch at the extreme limit of travel.

133. (e) While operating the hoist at full speed with the governor counterweight in a mid position, note the distance between the main contacts in the switch-box, and adjust the governor nuts above the spring so that the contacts will be separated about 1/32" for full speed, (tightening the nuts allows more speed, and slackening them allows less speed). Then tighten the lock-nut against the set-nut. By moving the counter weight inward or outward, a fine adjustment may be made with the hoist in motion but only after the governor spring adjustment has been made approximately right.

134. *The older Model D Lilly Controllers do not have a governor spring, and therefore the governor adjustment must be made entirely by means of the governor counterweight, which is heavier than the new counterweight.*

135. (f) Mark on the cam dial with a pencil the amount the dial travels during normal retardation, and cut the retarding cam to a wedge shape, starting from the rim of the dial, and reaching the top of the cam at a distance around the dial to correspond with the pencil marks, but curving the wedge somewhat to conform to the curve of the dial rim.

136. Bolt one cam in place on the dial, and note the action of the contacts during retardation. The governor contact and the overspeed alarm contact should continue approximately the same distance apart thruout normal retardation as during full speed, this being governed by the cam profile. If during any part of normal retardation these contacts are too far apart or too close together the cam should be fitted to correct their action and maintain the opening between the contacts approximately the same throughout full speed and retardation. The warning bell assists materially to profile the cams, but it should not ring while the hoist is operated correctly after completing the cam profiles.

137. (g) As both retarding cams are usually alike, the first one profiled may be used as a pattern for the other, after which each cam may be bolted in place on the dial, to take care of retardation at both ends of travel.

138. (j) See that nuts and bolts are tight, re-connect the brake regulating rod, and remove the jumper from the overspeed switch terminals, after which the equipment is ready for testing.

139. (k) When all speed adjustments have been made, *see that the governor has sufficient reserve action to enable it to function for overspeed,* because if adjusted to the limit for normal speed, there would be no reserve movement to take care of overspeed.

ADJUSTING THE MAN-SAFETY EQUIPMENT ON A MODEL D LILLY CONTROLLER

(See Fig. 33)

140. (a) Connect the hoistman's levers with the Lilly Controller, as shown in Fig. 32. See that the proper movement of the man-safety arm is obtained when the levers are placed in position for full speed, and for man-speed, and that they operate as indicated in Fig. 32.

141. (b) If the weight of the hand lever is not sufficient to positively hold the man-safety engaged, drill holes in the quadrant so that the lock-pin of the lever may snap in when moved to that position. When the lever stands in center for neutral position, it is imperative to have a hole to locate it and lock it in that position.

142. (c) Place the man-safety in the position to protect men for either cage, and run the hoist at the man speed.

143. Adjust the controller for man speed, by nuts shown in "C" Fig. 33.

144. The adjustment should bring the contacts to within approximately 1/32" from each other when operating at the man speed. After tightening the nuts, see that the rod works freely, and does not bind, and that the crosshead at the lower end is set parallel with the side of the frame.

145. (d) Profile one of the man-safety cams similar to the main retarding cams, but a little more gradual near the high part to insure a relatively low landing speed when the man-safety is engaged. Move the hoist to one of the limits for men, and stop there. With the man-safety lever set to protect that side, set the corresponding man-safety cam at the back of the dial so that further movement toward the end will stop the hoist. If two cages are handled by one drum, the man-safety cams will be set on spacers so that one cam will stand 7/16" farther from the dial than the other one, providing selective action to protect either side as desired. With the offset cams there will be a double-ended rocker arm carrying a roller in each end, the rollers set in different planes to correspond with the offset cams.

146. If the hoist-drum handles only one cage,* both man-safety cams will be mounted on spacers at the same distance from the back of the dial, and a single rocker arm and roller will suffice. **

147. (e) Connect the light circuit, and check the movements of the levers, and the indicating lights, to see that the lights show in the engine room, at the shaft, and underground if extended that far, to indicate when the man-safety is engaged, and which cage is protected.

148. After the man-safety levers have their movement checked and approved, a hole should be drilled in the quadrant just outside of each extreme position, and a ⅜" pin driven in, as a stop for the lever, to enable the hoistman to find the stopping point easily and quickly, and also to prevent straining the connections by forcing the levers beyond their normal limits of travel.

*Either drum of a double-drum hoist, or a single-drum hoist unbalanced or carrying a cage on one side only.

**A double ended arm is supplied so that it may be rocked either way, but after being installed only one end is used.

BRAKES—ADJUSTING THE AUTOMATIC BRAKE OPERATING MECHANISM

(See Figs. 35 and 36, and A, B, C, D, E, Fig. 37.)

149. The brake applying mechanism should always be adjusted while the hoist is standing in an intermediate position, and it is well to make these adjustments before adjusting the Lilly Controller. Do not attempt to adjust the brake control mechanism with the hoist in motion. Observe the speed at which the hoistman applies the brake when the hoist is running at full speed, to stop it without severe shock, and adjust the automatic mechanism to apply the brake in a similar manner when the solenoid or magnet circuit is opened.

150. A single drum hoist with two ropes may usually be balanced at an intermediate position, so that the drum will stand with the brake released. With the brake regulating means in position for slow brake action, open the circuit so that the Lilly Controller auxiliary equipment will apply the brake, and observe the speed at which it applies. If not right, adjust the valve movement until the desired brake action is obtained, testing the brake from time to time by alternately releasing and then applying it.

151. Each brake of a double-drum hoist may be operated in turn and the brake control mechanism adjusted independently while alternately having the opposite brake hold the hoist.

THE AUXILIARY WEIGHT UNITS WITH REGULATING STOP TO OPERATE GRAVITY BRAKE ENGINES

(Figs. 16, 17, 18 and 37.)

152. The Lilly Controller auxiliary weight units with regulating stop operate the brake engine valves direct, and not thru a floating mechanism, for the latter would bring the valves to central position before the brake could set fully, preventing further brake travel, whereas moving the valves direct, and holding them in the brake applying position causes full application, the speed of brake setting being governed by the amount of valve opening. When this is done, the floating lever takes care of itself, the movement being taken in a slot or collapsing means when same is provided, or by moving the hoistman's lever when neither slip connection or collapsing means are used.

153. The hoistman's lever should not be moved by the automatic application of the brakes when it moves toward the hoistman to apply the brakes, as it is liable to cause injury. For installations on new hoists, it is an easy matter to provide slotted connections or their equivalent, so that either the hoistman or the automatic safety equipment can apply the brakes without interference from each other. In many cases, especially with oil operated gravity brakes, the hoistman's lever is not affected by the automatic application of the brakes, but in order to reset after an emergency stop, the lever must be placed in the brake applying position before the solenoid will pick up, this feature usually being provided by an electrical interlock. An adjustment must be provided so that the valve opening may be varied as desired, to give the correct speed of brake application. The high part of the regulating stop should check the movement of the auxiliary weight when it drops for intermediate positions in the shaft, but at the limits of cage travel the lowest part of the stop should engage. Between these two extremes of action, the speed of brake application in an emergency will be gradually slower going away from the end of travel, and faster when approaching.

154. The steps of the regulating stop may be altered when necessary, to quicken the brake action at a greater or less distance from the end of travel, relative to the retarding cams, and in some cases the brake action should be quickened to full speed application at the beginning of retardation, while in others it should remain slow to near the end of travel. Usually, however, the brake regulating stop as furnished is satisfactory without changes.

155. If the arm lengths and connections have been correctly designed and the mechanism adjusted for slow brake action, the fast action will be right. It is a good plan, however, to move one of the retarding cams on the dial to the position for quick brake action. Then open the circuit, and observe if the brake applies as fast as necessary.

156. The brakes should act quickly at the ends of travel, in order to stop the drum within the available clearance. *The Lilly Controller prevents approach to the limits except at relatively low speed.*

157. Valve mechanism is sometimes found in which the valves bounce ahead of the position to which they are moved by the Lilly Controller auxiliary weight, thereby tending to set the brakes too fast, and making the operation irregular and unreliable. This can usually be corrected by cams, friction members, dash-pots, springs, or other means of balancing the mechanism.

158. In the design of some brake engines the valves are operated by a vertical sliding rod balanced by a spring, the tension of which may be adjusted by a set collar. This collar should be set so that the spring tends to bring the rod to neutral position, and when it is forced downward by the action of the Lilly Controller, the spring prevents the rod from bouncing ahead of the position to which the emergency weight has moved it, setting the brakes in the proper manner.

AUXILIARY WEIGHT UNITS USING AN OIL REGULATING CYLINDER

159. Auxiliary weight units using an oil regulating cylinder to control the movement of the brake weight should for hand operated brakes be connected to the mechanism direct, and for power operated brakes, they should be connected to operate thru the hoistman's controls and the floating mechanism. See C, D, E, Fig. 36.

ADJUSTING THE REGULATING CYLINDER

160. If the action of the regulating cylinder is too slow with the valve closed (the cylinder being nearly full of oil) the adjustment may be changed to keep the valve partially open, and if necessary the hole in the piston may be enlarged or the valve removed and a leakage groove filed around it to connect with the by-pass, allowing a small amount of oil to pass thru when the piston moves down in the cylinder. If the action is too fast with the valve closed, heavier oil should be used, or the hole in the piston should be partly closed, which can be done by peening the metal around it.

161. If the brake action is not fast enough at the limits of cage travel with the valve open, the passage thru the valves may be enlarged, or lighter oil may be used.

162. The cylinder should not be filled while the piston is up, as the displacement of the rod must be provided for, to permit the weight to fall. Hence it is best to fill the cylinder when the weight is at its lowest position, and let a small amount of oil out, to permit a margin of travel.

163. Where the temperature varies considerably, transformer oil may be used in the regulating cylinder, as temperature changes affect it less than lubricating oil, and its action from day to day will be more uniform.

ADJUSTING THE PISTON VALVE

For Oil Operated Gravity Brakes Shown in Figs. 12, 13, 15, and 35.)

164. The piston-valve plunger has notches extending across both sides at the top, and when the valve is opened the necessary distance for slow brake application, the release of oil from the brake cylinder takes place thru these notches. If the brake action is too slow, the stem should be screwed downward to lower the plunger slightly, and if too fast, the plunger should be raised. If much faster action is desired, it is advisable to remove the plunger from the valve body, and widen the notches across the top, or cut additional notches to allow the oil to flow thru more rapidly.

165. The purpose of the notches to release the oil for slow brake action instead of releasing around the entire circle, is because if there should be a slight difference in movement due to lost motion it has less effect upon the operation, and therefore it is easier to control. The pipes must be carefully fitted and flushed out before connecting to the valve, as chips or cuttings might lodge in the valve and prevent it from operating, or score it so as to cause a leak. If the valve plunger is removed from the body, care should be taken to prevent damaging it, and it must be assembled free from dust or grit, and be perfectly free in all positions, as a sticky valve would not be dependable for emergency use. The valve should be tested after the pipes are screwed in, to check for possible distortion.

166. The steps of the brake regulating stop may be altered if necessary to bring about quickened brake action at a faster or slower rate when approaching the limit of travel.

SAFETY EQUIPMENT FOR HAND OPERATED BRAKES

(Figs. 8 to 11)

167. The Controllers and equipment shown in Figs. 8 to 11 are usually easy to install. An arm should be keyed to the shaft as shown in D and E, Fig. 36, the arm usually being set at an angle of about 90 degrees from the direction of pull with the weight up, so that the slack in the brake connections is quickly taken up by the movement of the weight where its leverage is least, and the intensity of the pull to the brakes increases to a maximum at the tightening point. This makes it possible to provide for the necessary brake pull with a minimum amount of weight, and therefore facilitates resetting the weight after it operates in an emergency.

168. For steam hoists the throttle closing arm on the equipment shown in Fig. 10 may be connected to the throttle in any convenient way, but usually a slotted connection is used, so that when the weight is latched in the reserve position, the hoistman may open or close the throttle at will.

SAFETY EQUIPMENT FOR AIR OR STEAM OPERATED GRAVITY BRAKE ENGINES WITH OIL CYLINDER CONTROL, AND SYNCHRONIZING VALVES FOR THE AIR (OR STEAM) CYLINDER AND THE OIL CYLINDER

169. There are a number of engineering problems involved in correctly controlling the automatic operating of the brakes with this type of brake engine.

170. Three typical arrangements are shown in Fig. 36 as follows:

A — A Brake Regulator (B-210, and C-539) as used for Steam Hoists, connected with the valve gear of a standard and well known type of brake engine.

B — A Weight Unit (B-288, Figs. 16, 17, and 18) connected to the same brake engine for an electric hoist.

C — A Weight Unit (D-845, Figs. 19, 20, and 21) connected to the controls of the same brake engine.

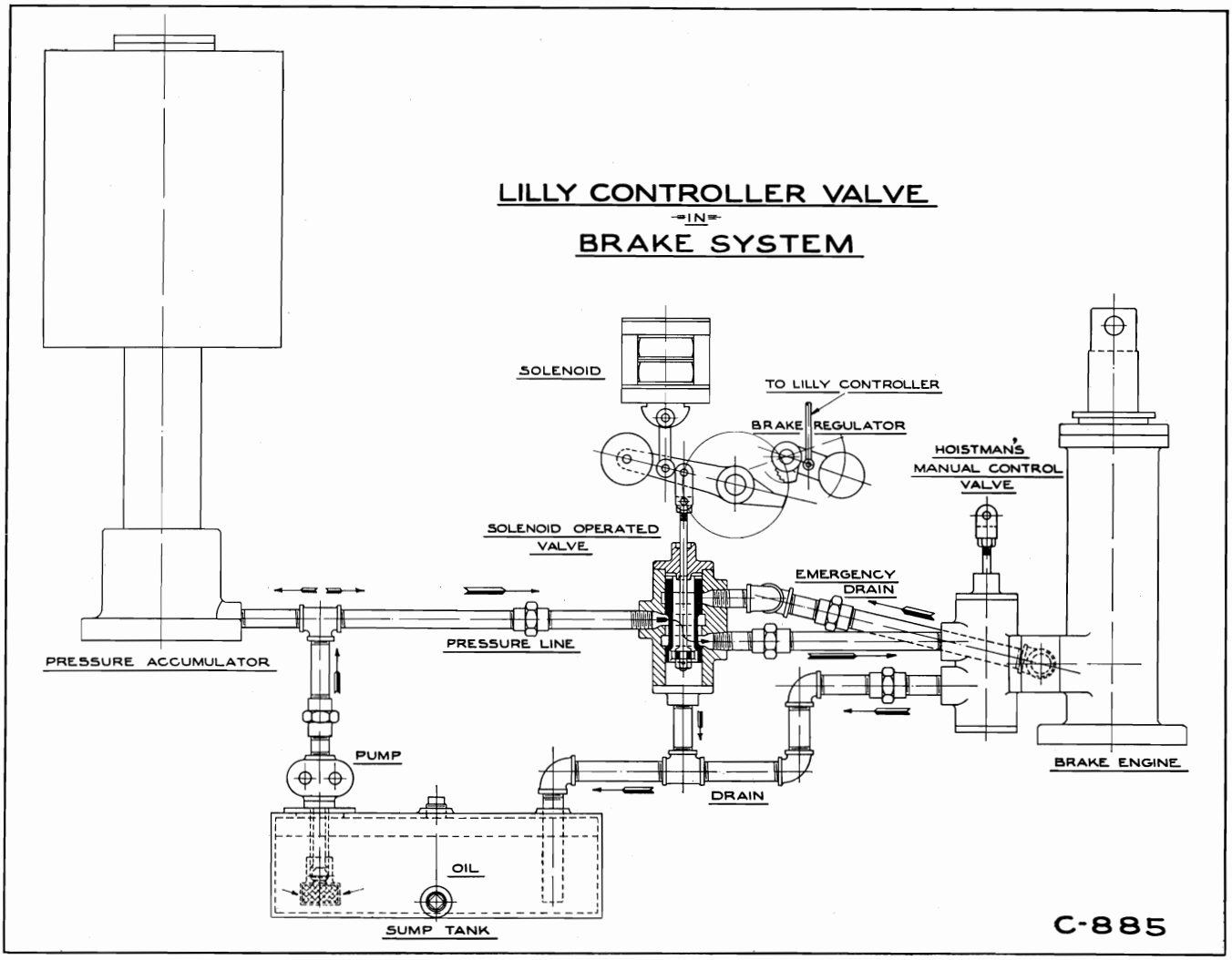

FIG. 35—Hydraulic Connections for Solenoid Valve Unit shown in Figs. 12, 13 and 15. See Paragraphs 71, 72 and 164 to 166.

171. It will be observed that the arrangement shown in "A" and "B" involves the direct operation of the brake engine valves, the speed of setting the brakes being controlled by a regulating stop. (See instructions for adjusting Paragraphs 152 to 158.)

172. The arrangement shown at "C" includes a regulating cylinder to control the speed of applying the brakes, and the brake engine valves are operated in emergency through the floating lever, just as they are applied by the hoistman.

173. An advantage of the equipment and arrangement shown in "A" and "B" is that the valves are operated directly, thereby eliminating danger from possible breakage or disconnections between the hoistman's lever and the brake engine.

174. The equipment and arrangement shown in "C" is usually easier to install, especially for hoists in the field, and altho more expensive than the equipment using a regulating stop, it is frequently preferred.

175. In all of these arrangements as shown, the brake lever will be moved when the safety device functions, but where the lever moves away from the hoistman to set the brake, it is usually quite satisfactory. Various methods have been used to disconnect the control from the hoistman's lever when the emergency weight drops, so as not to move the lever, but in any arrangement of this kind, the hoistman should not be deprived of his means to set the brake faster if he so desires, although he may be deprived of his means of releasing the brake until the safety equipment is reset.

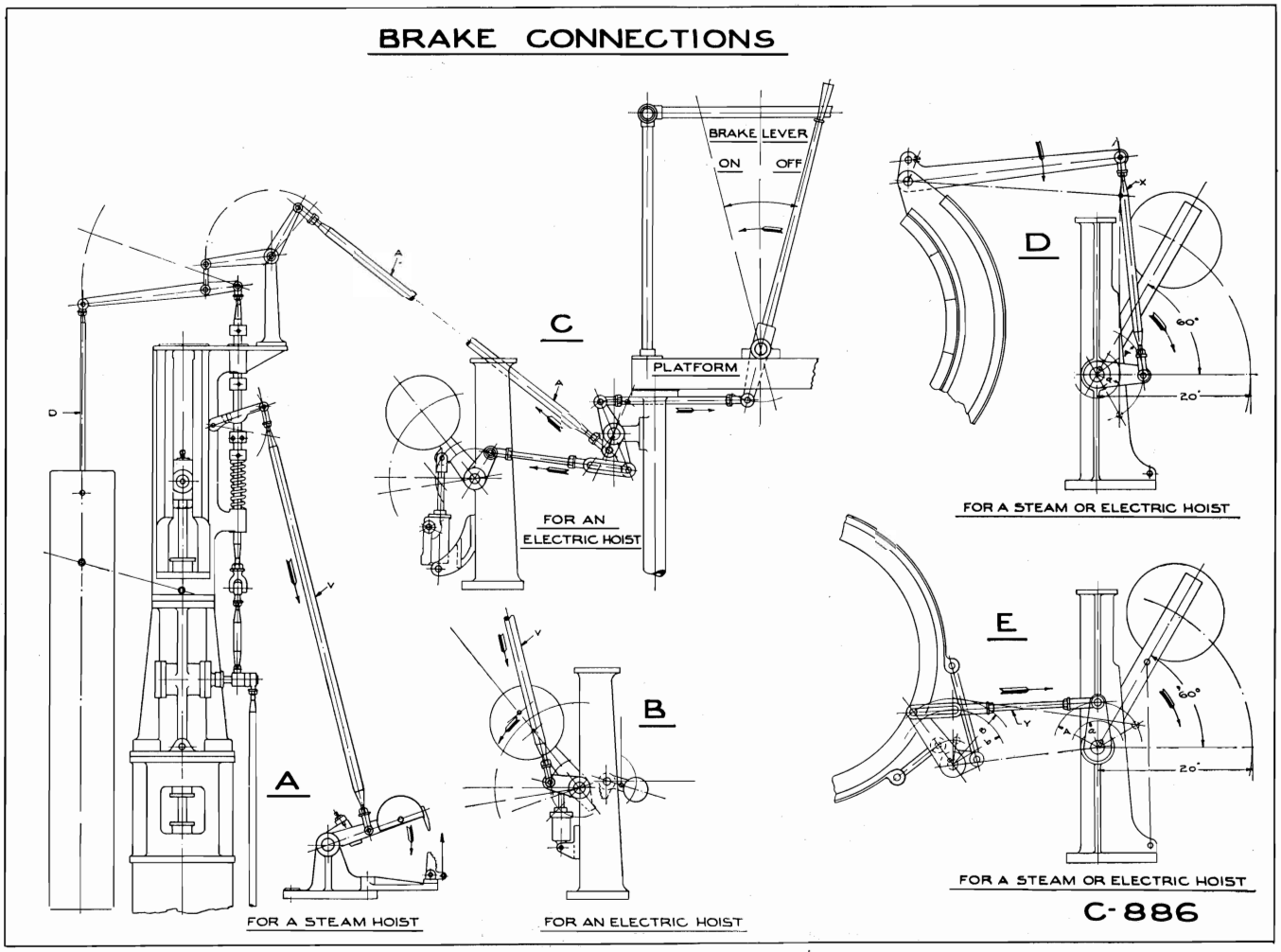

FIG. 36—Connections for various brake operating units. D shows a connection for a brake used exclusively for the safety device. If also used by the hoistman, the rod must have a slotted head at one end.

176. Some air operated gravity brake engines are provided with auxiliary valves for emergency operation, in which the safety equipment does not connect with the main valves. With this arrangement the automatic mechanism must prevent the transfer of oil through the hoistman's valve during an emergency setting of the brake, except when his lever is moved to brake-setting position. Otherwise the oil valve being opened backward by the floating mechanism will cause the brakes to set at an accelerating rate, which is the reverse of what is desired.

177. In order to retain the automatic control of the brakes and not interfere with the hoistman's means of increasing the speed of setting them if he should desire to do so when the safety device acts, a three ported valve may be used in the oil manifold, one port being common to the up and down movement of the brake engine, and an independent port and passage for the up, and another for the down movement.

178. A shut-off valve may be placed in the brake releasing passage and closed by the safety equipment simultaneously with opening the release valve in the auxiliary by-pass, thereby preventing the regular control valve from interfering with the speed of setting the brakes as controlled by the auxiliary by-pass valve.

179. Should the hoistman desire to increase the speed of setting the brakes, he may do so in the usual way, because the by-pass is available through which the hoistman's valve permits the oil to transfer from the lower to the upper end of the oil cylinder.

THE BRAKE AND THROTTLE OPERATOR ADJUSTMENTS

Altho Brake and Throttle Operators are seldom involved since ELECTRIC hoists have taken over at most mines, these instructions are furnished in case they may be of use.

180. A series of holes is provided in the armature hanger, to obtain an adjustable holding pull, and the pin should be used in a hole as far from the armature as the holding power of the magnet will allow (with a reasonable margin for vibration or lower voltage), in order to release instantaneously when the coils are de-energized.

181. The latch usually has to carry the 100-lb. weight of the Brake and Throttle Operator, and the arm and weight of one brake regulator, and sometimes two, hence the necessity of adjustable leverage to enable the magnet to support the maximum load, yet to be sure of releasing with a minimum load.

182. When used with battery current, a thin brass sheet soldered and riveted to the face of the armature prevents the possibility of residual magnetism holding the armature after the circuit is opened, and the brass must not be removed.

183. Connection to the throttle should be made as simple and direct as possible, and usually an arm keyed to the shaft of the Brake and Throttle Operator is connected by a rod with a slotted head, so that the throttle may be opened and closed at will by the hoistman, but when the Lilly Controller circuit is opened, releasing the weights, the main weight instantly closes the throttle by means of the slotted head.

STOP-BUTTON

184. A rugged type stop-button should be placed within easy reach of the hoistman, and connected in the Lilly Controller circuit, enabling the hoistman to stop the hoist in case the manual controls of the hoist fail. Stop-buttons may also be placed at remote points such as at the top and bottom of the shaft, to enable attendants to stop the hoist quickly in an emergency.

PUTTING THE LILLY CONTROLLER IN SERVICE, AND TESTING

185. (a) Do not attempt to adjust the Lilly Controller with all electrical circuits connected thru the controller. Leave the overspeed connections off or short-circuited until the mechanical adjustments are completed.

186. (b) See that the brake operating mechanism is in good working order, and properly adjusted. (See paragraphs 149 to 179.)

187. (c) Connect the Lilly Controller drive, and proceed to adjust the controller in accordance with detailed instructions. (See paragraphs 127 to 148.)

188. (d) When the mechanical adjustments have been completed, the electrical circuits may be connected in accordance with the instructions and diagram.

189. (e) To test the controller adjustments (the brake regulator having been adjusted) start the hoist away from the end of travel, at low speed, and then push the stop-button, or raise the governor counterweight by hand. If the mechanism functions properly, repeat the test a number of times, at a higher speed each time until the hoist is stopped from full speed. This permits the test to be conducted so as to avoid severe shock or other danger that might arise if the hoist were first stopped by the controller from high speed. Usually the action will be satisfactory if proper care has been taken with all details.

190. (f) It is advisable to advance the cams to stop the hoist at an intermediate point in the shaft, and run into them at various speeds, noting where the hoist is stopped. If the stop in each case is made within the distance on the cam that would indicate a safe stop at the limits, the cams may then be moved to their proper places and tightened there.

191. (g) Care must be exercised in making all tests, as success depends upon the brakes and the hoist controls, as well as upon the Lilly Controller, and needless risk should be avoided. There is no danger of causing damage in making tests, if reasonable care and judgment is used.

WIRING DIAGRAMS

192. The wiring diagrams shown in Figs. 38 to 42 are typical, but not necessarily correct for all installations. The purpose in showing these is to convey the general scheme, and obviously a diagram should be arranged to suit each individual installation.

193. Each Lilly Controller has three main switches,—an overspeed and two selective limit switches. These three switches should be wired in series, and for electric hoists, connections thru a standard back-out switch should be arranged to short-circuit either limit switch at will if held open by overtravel, at the same time opening a circuit in the control to prevent the hoist from being operated farther in the wrong direction. The Lilly Controller switches are usually connected in the retaining circuit of the under-voltage contactor, and in case of a double installation involving two Lilly Controllers, the six switches (3 in each controller) will be connected in series.

WIRING

194. No. 14 wire may be used for connections, but No. 12 is sometimes preferred because of its greater mechanical strength.

195. All wiring should be done in a first class manner, running the wires in conduit, and properly protected to prevent short circuits, loose connections, and mechanical damage.

ELECTRICAL TROUBLES AND REMEDIES

196. If a hoist is occasionally stopped by the safety equipment without apparent reason, it is evident that there is a loose connection, a defective conductor, or poor contact at a push-button or at one of the switches.

197. The switches should be scraped clean, and their springs checked to make sure that they close the switches properly, and yet are not so strong as to interfere with normal opening in case of an emergency.

198. See that the overspeed switch makes good contact at each side. If it tends to touch one side harder than the other, or does not have sufficient "rock" on the hinge pin or clearance between the fixed fingers, enlarge the hole at each end, and file the finger so as to allow it to rock sufficiently to engage both of its two electrical contacts equally.

199. If track limit switches are used, they should be tested in case of an open circuit, as they may stick in an open position.

200. If the holding coil is "dead," a test should be made around the coil, as it may be burned out, and if found to be defective it must be replaced. If there is current at the source, but not in the circuit, and the switches and terminals are apparently all right, the circuit should be traced to locate the break, keeping in mind that an insulated wire that appears to be intact may be broken inside of the insulation.

201. When Controllers are installed on hoists that are subject to excessive vibration, the standard switch springs may not have sufficient strength to hold the switches closed firmly, and they may have to be shortened, or stronger springs installed.

MAINTENANCE RECOMMENDATIONS

202. (a) The retarding cams must not open the overspeed switch without governor action, for that would make it necessary to short-circuit the overspeed switch before the hoist could be backed out of overtravel, which would eliminate a very important feature of protection. The overspeed switch must be connected in the emergency circuit so that it will not be short-circuited under any conditions.

203. (b) See that the cams are set at the correct position on the dial to function properly during the retarding period and at the limits of travel.

204. (c) See that the governor has not developed excessive lost motion in a vertical direction. If lost motion has developed, machined washers should be used, or a slight amount may be faced off the shoulder above the bevel gear, being careful to keep the bevel gears in proper relation.

205. (d) When the hoist is at the end of travel, with a retarding cam on top of the roller, see that the overspeed switch contact is set so that the warning contacts are .015" to .032" apart. See B-1, Fig. 33.

206. (e) In the position described in (d) raise the governor balls slightly by hand and the alarm bell should ring. Raise slightly higher and the overspeed switch should open.

207. (f) When the hoist it at rest, at an intermediate point, with the retarding cams NOT on the roller, raise the governor balls, by hand, to a point slightly above the angle at which they operate at full normal hoisting speed, and the alarm bell should ring. Raise them slightly higher and the overspeed switch should open.

208. (g) When the hoist is running at full normal speed, see that the governor arms have a margin of movement (below the horizontal) for overspeed.

209. (h) See that all pins, linkages, spur gears, bevel gears, worm gears and shafts are in good condition and have not developed lost motion.

210. (i) See that the brake operating and regulating mechanism is correctly adjusted and functioning properly. Be sure that when the overspeed switch or either of the limit switches are opened, the power will be immediately cut off and the brakes applied.

THE HOIST BRAKES

211. Remember that a great deal depends upon the brakes, and they should be kept in first-class condition and adjustment.

212. For gravity applied brakes, care should be taken to maintain the adjustments so that the full force of the brake weight will act on the drum, and that part of it is not lost by a piston striking the bottom of the brake engine cylinder, or by any interference with the free movement of the weight.

213. Hand brakes should be adjusted so that the lever does not operate to the end of its quadrant, so as to have a reserve in case of the brakes heating, or the linings wearing.

214. The brakes should respond properly during manual operation, and retard the drum smoothly, at a fast or slow rate as may be desired, for otherwise it is not likely that the safety device can operate them satisfactorily.

215. If the brakes are efficient and responsive for manual operating, they can be operated in the proper manner by a Lilly Controller.

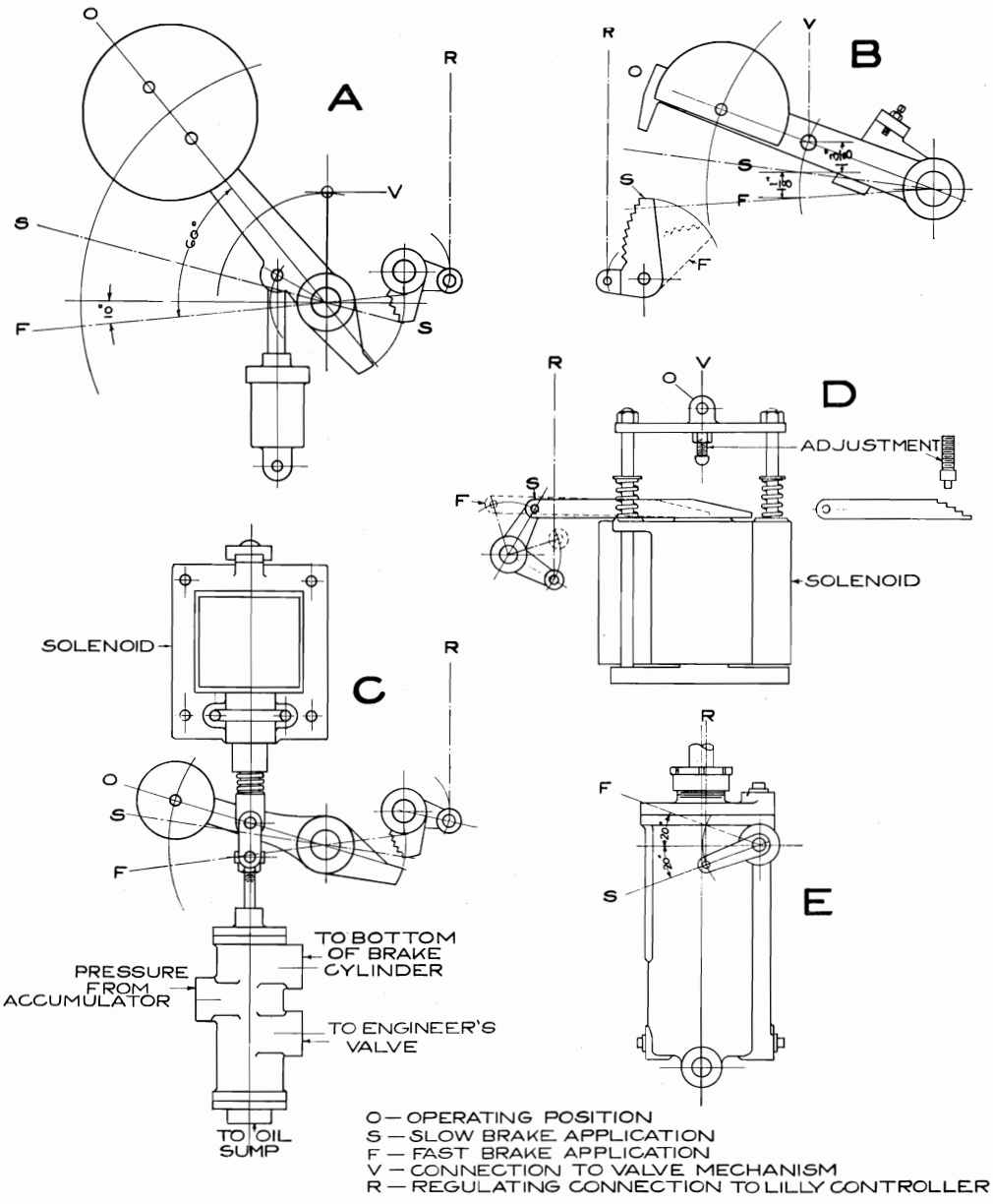

A — BRAKE REGULATING STOP FOR AIR OPERATED GRAVITY BRAKE EQUIPMENT

B — BRAKE REGULATING STOP AS USED WITH EQUIPMENT FOR STEAM HOISTS.

C — BRAKE REGULATING STOP AS USED WITH EQUIPMENT FOR OIL OPERATED GRAVITY BRAKES

D — ANOTHER METHOD. BRAKE REGULATING WEDGE AND STOP.

E — REGULATING CYLINDER. VALVE OPENS UPWARD IN STANDARD EQUIPMENT FOR "HAND OPERATED BRAKE" HOISTS. MAY BE ARRANGED TO OPEN IN EITHER DIRECTION.

BRAKE REGULATING DIAGRAMS

FOR LILLY HOIST CONTROLLERS

C-522

FIG. 37—Sketches of various forms of brake regulating means used with Lilly Controllers.

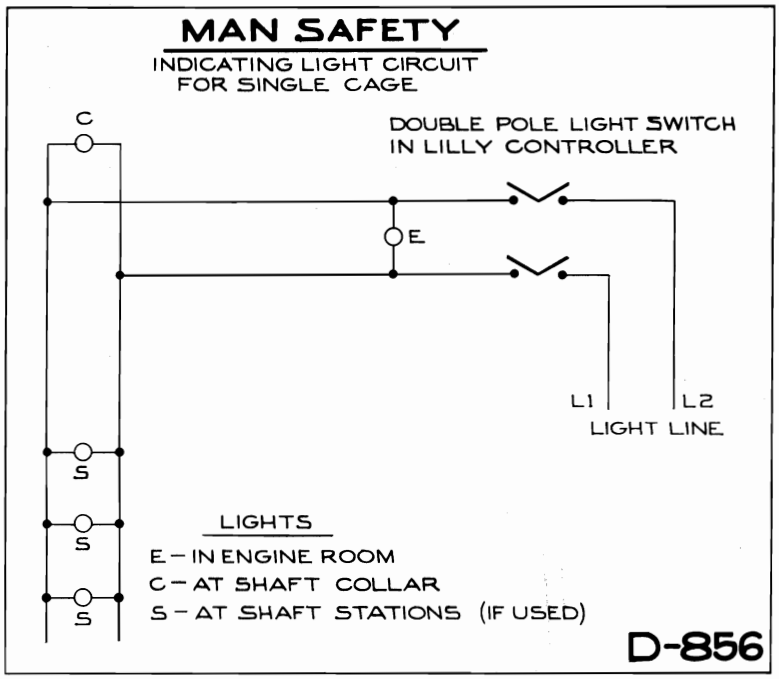

FIG. 38—Lilly Controller man-safety light circuit for a single cage.

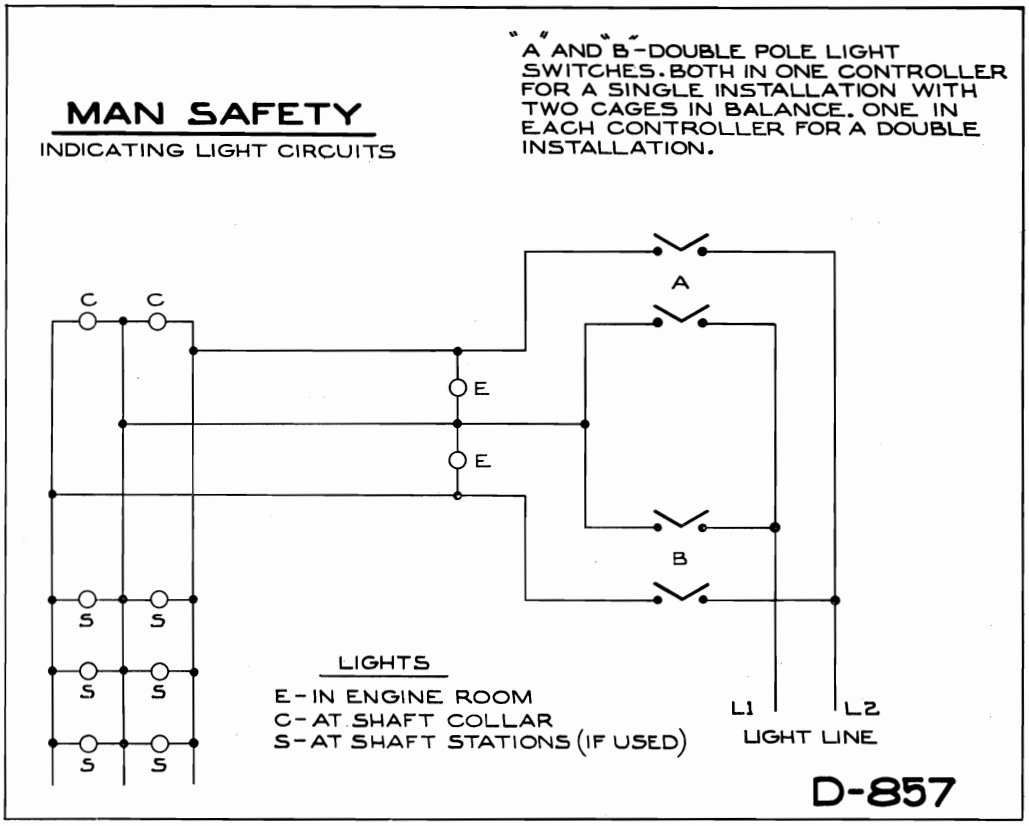

FIG. 39—Lilly Controller man-safety light circuits for two cages, for either one or two Lilly Controllers.

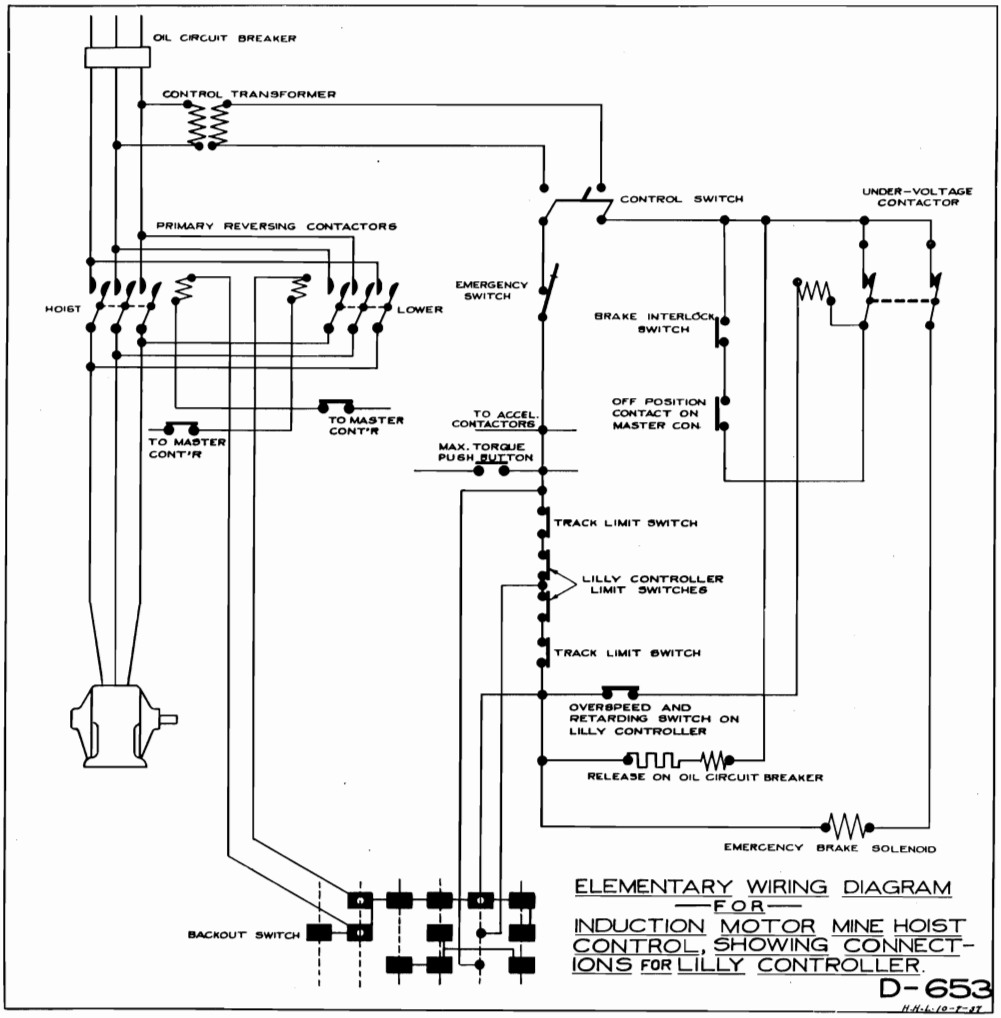

FIG. 40—Lilly Controller elementary electrical diagram for a single-drum electric hoist.

THE DIAGRAMS FOR ELECTRIC HOISTS

216. The elementary diagram in Fig. 40 shows the Lilly Controller contacts carrying the current for the brake solenoids and the coil of the oil circuit breaker, as well as the coil of the undervoltage contactor.

This arrangement is ideal in some cases, but where there is a large solenoid, or two solenoids as in the case of double drum hoists, there may be too much current for the contacts of the Lilly Controllers, which were designed to handle a control circuit only. The contacts may carry the current without trouble, but there will be more arcing, which with a slow break has a tendency to burn the contacts.

217. The diagrams on the following pages show the Lilly Controllers carrying the current of the under-voltage contactor coil only, which has proven to be good practice. This enables the hoistman to re-start easily after the hoist has been stopped by the safety device.

218. Where the brakes are operated by a solenoid valve, it is only necessary to bring the control lever to neutral and apply the brake lever, and then re-start the hoist without leaving the platform after an emergency stop by the Lilly Controllers.

219. Where weighted equipment and a magnetic latch are used to set the brakes, and sometimes also to close a throttle, the weight must be re-set before re-starting the hoist, as the magnetic latch simply holds the weight in the reserve position, but it cannot raise the weight.

220. Many new installations have two undervoltage contactors connected in the control circuit in series and with their coils in parallel, to eliminate possible danger of a single contactor sticking and failing to open when the retaining circuit is interrupted. The arrangement is shown in the upper left in the diagrams Figs. 41 and 42.

221. Double undervoltage contactors are recommended, and a second U.V. contactor may easily be installed on a panel that was originally equipped with only one.

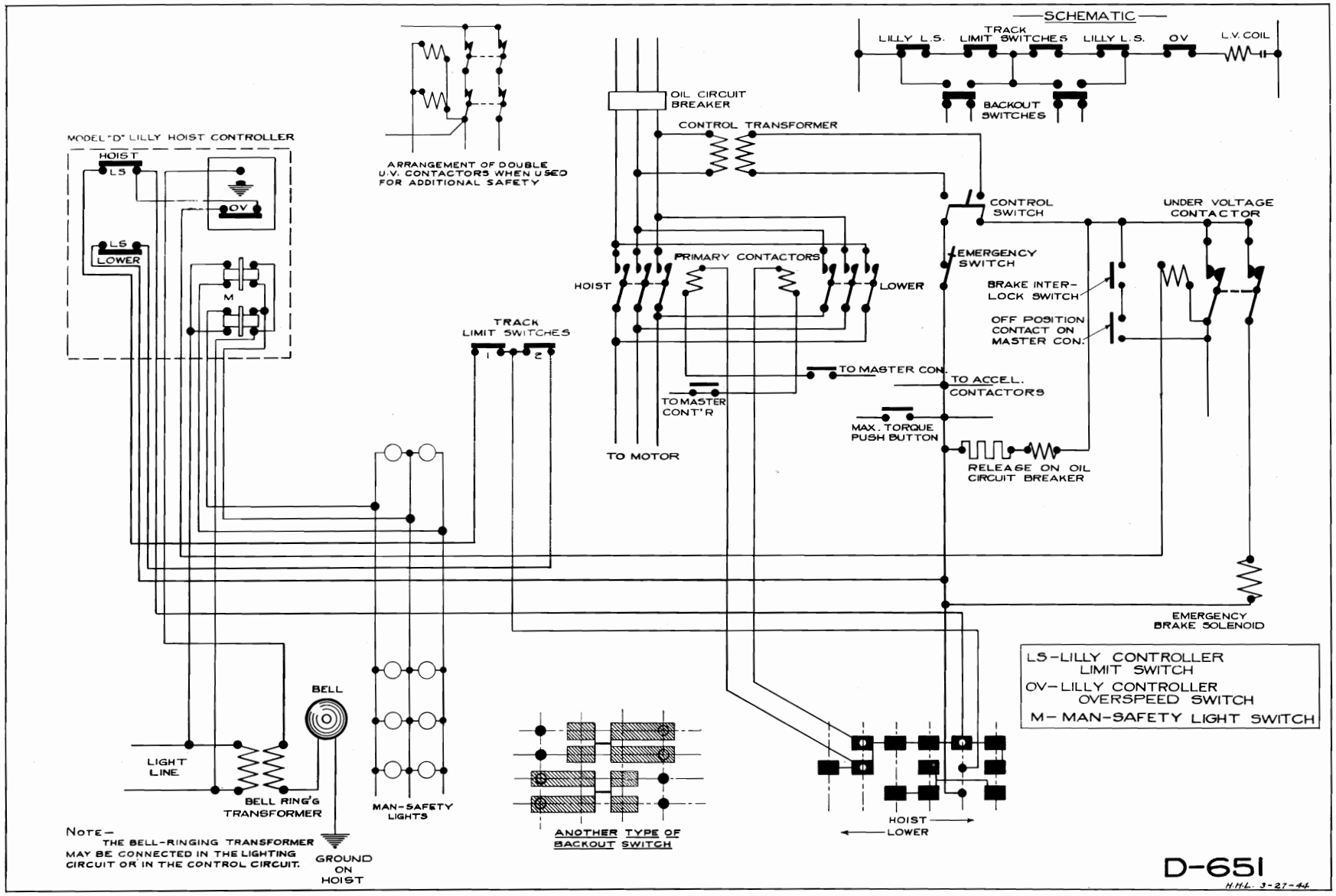

FIG. 41—A typical wiring diagram for a Lilly Controller, on an electric hoist, including wiring for the man-safety equipment. The contactors indicated are part of the regular electrical equipment of the hoist.

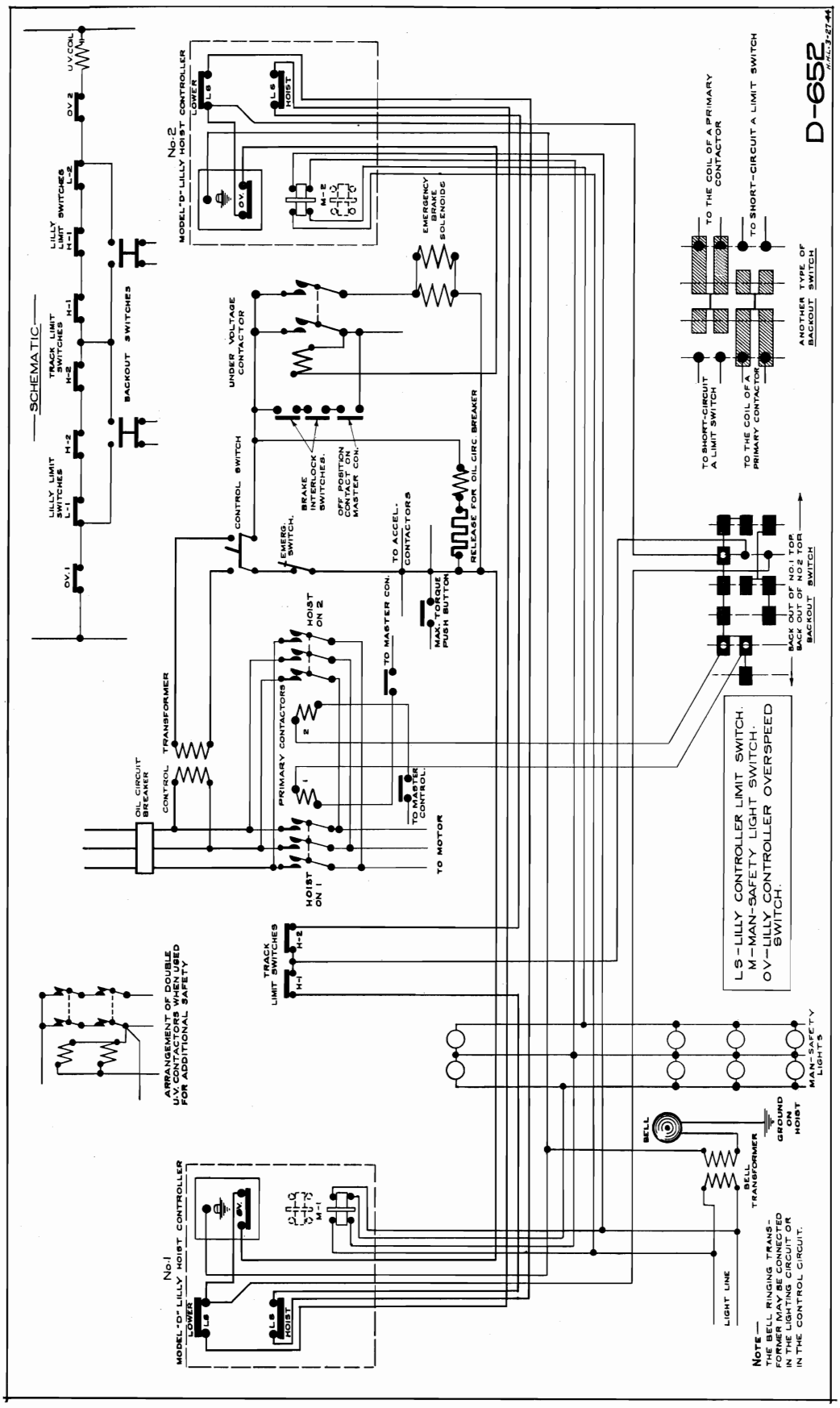

FIG. 42—A typical diagram for Lilly Controllers on a double-drum electric hoist, including wiring for the man-safety equipment. The contactors indicated are part of the regular electrical equipment of the hoist.

MEMORANDA

Logan ACTUATOR CO.
MANUFACTURER

CHICAGO, ILLINOIS
U. S. A.